MAN IN INDIA

VOL. 49
NO. 1 JAN.-MARCH 1969

A Quarterly Anthropological Journal
Founded in 1921 by Sarat Chandra Roy

CONTENTS

	Page
Cultural Relativism ... —*Nirmal Kumar Bose*	1
The Pasupatinatha Temple : Nepal ... —*Amita Ray*	10
A Note on the Sociology of Buddhist Tantrism ... —*Malati J. Shendge*	24
Genetics of Medullary Structure of Human Head Hair —*A. R. Banerjee*	30
Anthropometric Characters of Foot of a Rural and an Urban Population of Assam ... —*Bonoshree Devi* —*Bhuban M. Das*	41
Anthropometry of the Kaibarta of Assam ... —*Bhuban M. Das* —*Madhu Sudan Das*	49
Anthropometry of the Saharaya of Jhansi, U. P. ... —*Malay Kumar Banerjee*	58
PTC Taste Sensitivity in some Orissan Castes ... —*K. C. Tripathy*	64
Hypertrichosis of the Ear ... ... —*K. C. Malhotra*	71
Dermatoglyphic Study Among Three Bengal Castes —*Dharmadas Sarkar*	80
Finger-Prints of the Korku ... ... —*Arabinda Basu*	93
Indic Elements in Tibetan Culture : Polity ... —*Nirmal Chandra Sinha*	102
Miscellaneous Notes	109
Book Reviews	112

Edited by

Nirmal Kumar Bose

MAN IN INDIA

PUBLICATIONS

Works

of

Sarat Chandra Roy

1. The Mundas and their Country
2. The Oraons of Chota Nagpur
3. Oraon Religion and Customs
4. The Kharias, 2 vols.
5. The Birhors
6. The Hill Bhuiyas
7. Caste, Race and Religion in India

A few copies of *The Oraons of Chotanagpur* are available at Rs. 50. *Caste, Race and Religion in India* is also available. Price : Rs. 10.

The Manager, Man in India Office
18 Church Road, Ranchi, S. E. Ry.
Bihar, India.

Index of Authors

(*Man in India*, Volume 49, 1969)

Basu, Arabinda
—Finger-prints of the Korku 93
Banerjee, A. R.
—Genetics of Medullary Structure of Human Head Hair ... 30
Banerjee, Malay Kumar
—Anthropometry of the Saharaya of Jhansi, U. P. ... 58
Banerjee, Papia
— Anthropometry Among the Peoples of Midnapur, West Bengal 361
Bose, Nirmal Kumar
— Cultural Relativism 1
Bose, N. K.
—The Tribal situation 217
Das, Bhuban M.
—See Devi, Bonoshree ... ...
Das, Bhuban M. and Madhu Sudan Das
—Anthropometry of the Kaibarta of Assam 49
Das, Madhu Sudan
—See Das, Bhuban M. ... ..
Deb, P. C.
—Socio-Cultural Correlates of Community Participation ... 259
Devi, Bonoshree and Bhuban M. Das
—Anthropometric Characters of Foot of a Rural and an urban population of Assam 41
Fox, Richard G.
—'Professional Primitives' : Hunters and gatherers of Nuclear South Asia 139
Ghosh, Aloke Kumar
—ABO Blood Group Frequencies of India, Pakistan and the Adjoining Areas as a Whole 372
Ghosh. Guru Charan
—Middle Phalangeal Hair Among Certain Groups of Bihar ... ...
Jaiswal, N. K., A. S. Khan and Jai Shankar
—Attitude towards agricultural Development among Tribal and non-tribal people 267
Khan, A. S.
—See Jaiswal, N. K. ... ...
Khare, R. S.
—Groups and Processes of Political Change in North Indian Gopalpur 188
Kochar, V. K.
—The Great Andamanese Today 247

Lakshminarayana, H. D.
—See Patnaik Nityananda ... ...
Malhotra, K. C.
—Hypertrichosis of the Ear 71
Maloney, Clarence
—The Paratavar : 2000 years of Cultural Dynamics of a Tamil Caste 224
Mohapatra, P. K. and J. Swain
—Conversion to Christianity 253
Panchbhai, Sudhir
—See Sinha, S. C. ... ...
Patnaik Nityananda and H. D. Lakshminarayana
—Factional Politics in Village India 161
Ray, Amita
—The Pasupatinatha Temple : Nepal 10
Rastogi, Sudha and B. R. K. Shukla
—Ridge-counts among the Rastogis of Lucknow (U. P.) ... 289
Roy Chaudhuri, Bikash
—Some Fishing Communities of West Bengal 241
Sachchidananda
Bitlaha : Analysis of a Santal Institution 281
Sarkar, Dharmadas
—Dermatoglyphic study among three Bengal Castes ... 80
Sen, Jyoti
—See Sinha, S. C. ... ...
Shanker Jai
—See Jaiswal, N. K. ... ...
Shendge, Malati J.
—A Note on Sociology of Buddhist Tantrism 24
Shukla, B. R. K.
—See Rastogi Sudha ... ...
Sinha, Nirmal Chandra
—Indic Elements in Tibetian Culture : Polity 102
Sinha, S. C., Jyoti Sen and Sudhir Panchbhai
—The Concept of Diku among the Tribes of Chotanagpur ... 121
Swain, J.
—See Mohapatra, P. K. ... ...
Sarkar, Dharmadas
—A Study of Finger Ball Dermatoglyphics in West Bengal ... 378
Sarkar, S. S.
—Bijay Chandra Memorial Lectures 1967 313
Srivastava, R. P.
—Fingerprints, Colour Blindness, and other Features in the Miris ... 398
Tripathy, K. C.
—PTC Taste Sensitivity in Some Orissan Castes ... 49

Index of Articles

(*Man in India*, Volume 49, 1969)

Anthropometric Characters of Foot of a rural and an urban population of Assam
—Bonoshree Devi, Bhuban M. Das 41

Anthropometry of the Kaibarta of Assam
—Bhuban M. Das, Madhu Sudan Das 49

Anthropometry of the Saharaya of Jhansi, U. P.
—Malay Kumar Banerjee 58

Attitude towards agricultural development among tribal and non-tribal people
—N. K. Jaiswal, A. S. Khan, Jai Shanker 267

Anthropometry among the Peoples of Midnapur, West Bengal
—Papia Banerjee 361

ABO Blood group frequencies of India, Pakistan and the Adjoining areas as a Whole
—Aloke Kumar Ghosh 372

Bitlaha : Analysis of Santal institution
—Sachchidananda 281

Bijay Chandra Memorial Lectures 1967
—S. S. Sarkar 313

Book Reviews ... 112, 211, 300

Concept of Diku among the tribes of Chotanagpur
—S. C. Sinha, Jyoti Sen, Sudhir Panchbhai 121

Conversion to Christianity
—Ch. P. K. Mohapatra, J. Swain 253

Cultural Relativism
—Nirmal Kumar Bose 1

Dermatoglyphic Study among three Bengal castes
—Dharmadas Sarkar 80

Factional Politics in Village India
—Nityananda Patnaik, H. D. Lakshminarayana ... 161

Finger-prints of the Korku
—Arabinda Basu 93

Fingerprints, Colourblindness, and other features in the Miris of Assam
—R. P. Srivastava 398

Genetics of Medullary Structure of Human head hair
—A. R. Banerjee 30

Great Andamanese today
—V. K. Kochar 247

Groups and Processes of Political Change in North Indian Gopalpur
—R. S. Khare 188

Hypertrichosis of the Ear
—K. C. Malhotra 71

Indic elements in Tibetian Culture : Polity
—Nirmal Chandra Sinha 102

Miscellaneous Notes ... 109, 295

Middle Phalangeal hair among Certain Groups of Bihar ... 388
—Guru Charan Ghosh

Note on the Sociology of Buddhist Tantrism, A
—Malati J. Shendge 24

Paratavar : 2000 years of Culture Dynamics of a Tamil caste
—Clarence Maloney 224

Pasupatinatha Temple : Nepal
—Amita Ray 10

Professional Primitives : Hunters and gatherers of Nuclear South Asia
—Richard G. Fox 139

PTC Taste sensitivity in some Orissan Castes
—K. C. Tripathy 64

Ridge-Counts Among the Rastogis of Lucknow (U. P.)
—Sudha Rastogi, B. R. K. Shukla 289

Socio-Cultural Correlates of Community Participation
—P. C. Deb 259

Some Fishing Communities of West Bengal
—Bikash Roy Chaudhuri 241

Study of Finger Ball Dermatoglyphics in West Bengal, A
—Dharmadas Sarkar 378

Tribal Situation
—N. K. Bose 217

MAN IN INDIA

VOL. 49 } JANUARY-MARCH 1969 { NO. 1

CULTURAL RELATIVISM

Nirmal Kumar Bose

I am deeply grateful to the organizers of the Indian Philosophical Congress for giving me this opportunity of discussing with them the important subject of Cultural Relativism. But I am suffering from a feeling of uneasiness. In anthropology, we use the term Culture in a sense which is slightly different from the way in which it is popularly used ; so that the meaning of what I am going to say may remain unclear at points. I would therefore pray for your indulgence while I try to deal with the subject matter from our point of view as an anthropologist.

The term Culture is used in anthropology in a rather broad sense. It includes the products of the mind, as well as such tangible and intangible objects as arise from the pursuit of various aims in social life. Thus, material objects like tools, houses and settlements, or institutions through which human labour and interpersonal relationship of various kinds are organized, as well as language by means of which one communicates with another, and art and religious beliefs which enrich human life in many ways, are all included within the broad compass of Culture.

An anthropologist usually works among communities which are markedly different from his own. But in modern times, there has been a tendency to apply the methods of observation, comparison and historical reconstruction to one's own culture in the manner in which they have been hitherto applied in the case of primitive peoples. The dividing line between social anthropology and sociology has thus

---

Address delivered at the symposium on Cultural Relativism, Indian Philosophical Congress, Patna, 29 December 1968. Published through the kind permission of the Secretary, Indian Philosophical Congress.

become indefinite, and we believe that this has been to the advantage of both the disciplines. This has naturally brought about a refinement in our methods of observation. More attention is now paid to the ideals and aspirations which lie at the bottom of human institutions, and the manner in which they also change in course of time.

In order to illustrate how this is done, let us take up the case of one social institution with which everyone is familiar in India. This is the caste system which forms an integral part of Hindu culture, and to which many anthropologists have devoted their attention in recent times. Those who have carried out detailed investigation in the field have reported how our villages are subject to poverty and social inequality, and yet how they cling to a productive system which is neither capable of feeding them adequately nor of assuring sufficient employment to everyone who wishes to work. Attempts have, of course, been made to improve agriculture, introduce modern industries, spread education and social services by both official and non-official agencies. But either the total efforts have been too meagre, or they have been thwarted again and again by the hold which tradition and caste seem to have upon the people. This apparently inexplicable conservatism has led many anthropologists to enquire deeply into the nature and functions of the caste system. Different authors have arrived at different conclusions, and I shall try to present the findings of one such school by way of illustration. The broad findings of this school will be indicated, while the questions which arise out of their enquiries will also be described.

According to this school, caste *is sustained by* an organization of production which is based on hereditary monopoly of occupations assigned to distinct social units which are endogamous. These units are again arranged in a hierarchy formed by privileged and unprivileged classes. Competition is deliberately discouraged, while mutual assistance is encouraged in a manner regulated by tradition, and not by law. It is also to be noted that, in the past, this productive organization depended upon manual and animal power as its principal sources of energy. Apparently such a productive system has been found unsuitable for catering to the needs of a growing population, or to the rising demands of a higher standard of material comforts,

In contrast to the capitalistic mode of production based upon competition and freedom of enterprise, caste is thus a non-competitive system. One can perhaps complain that by its means people shared their poverty instead of trying to secure plenty for everybody. But it was this act and tradition *of sharing* which was held to be important; and people consequently clung to it in spite of the obvious inequality which existed between different elements of the hierarchy.

It should also be remembered in this connexion that when production depends largely on human or animal power, the discrepancy in wealth cannot grow to such fantastic proportions as it can under modern conditions when mechanical power is employed. Even so, Hindu society set up another ideal in order to counteract whatever inequality might arise in ancient times. Instead of showing respect to men who accumulated wealth, more honour was bestowed upon men who spent conspicuously. Many stories are current in order to impress the lesson that those who give are more blessed than those who store.

One may naturally raise these questions : How far did people living under caste actually abstain from competition? How oppressive were the actual results of dividing society into privileged and unprivileged classes? Did conspicuous expenditure sufficiently ease the situation arising out of economic inequality? And, lastly, did the ideals thus built up in the culture persist because of intelligent participation and assent, or did they continue on account of blind and unintelligent adherence? If it were the latter, was it not more harmful for the individual in his spiritual growth than the discontent and restlessness and even cruelty which are apparent in the capitalistic order of society? Is not *rajas* better than *tamas*, if we are to use terms made familiar by Indian sacred literature?

These are indeed legitimate questions, but they are, in substance, questions relating to history. Our purpose today is to delineate in a broad sweep some of the working ideas underlying caste. We have already suggested that the desire to restrict competition and promote mutual assistance were two such ideals which were held to be of great value. At least, they had stood the people of India in good stead when king fought against king, and large-scale inter-provincial commerce became temporarily dislocated on account of these wars.

Even in the present age, when no more than 4 per cent of our working population has been able to find a place in modern industries and only another 6 per cent in 'household industries', the rural population of India still finds that the *economic* organization of caste is a dependable and helpful institution. If there is not enough room in a steamboat for all passengers gathered at a ferry station, and if they take recourse to country-boats in order to cross a river, they are indeed justified. They do so, not because they are conservative by nature, but because it is more practical to do so under the circumstances.

But this capacity of caste to help people to survive in spite of political vicissitudes was not its only merit. There was another element in it to which attention should now be drawn. When different communities were drawn into the caste system and assigned monopolistic occupations, at least in theory, they were also encouraged to confine marriage to their own group. There was a total control of men's economic and social behaviour. At least it was so in theory, and also perhaps largely so in practice. But in compensation a kind of *freedom* was assured to the federating units. This was the right to pursue their religious beliefs and ritual practices without let or hindrance.

In our opinion, this freedom largely took the edge off the discontent which arose from economic or other forms of social inequality. Whether this measure of cultural freedom was granted to the federating communities because the Brahminical leaders of society believed in such freedom or because they wanted to keep the subordinated people pacified is a matter of historical investigation. But there is clear proof that the Brahminical people did believe in the right of existence of different cultures side by side, provided the communities concerned were bound to one another at the economic level by an acceptance of the ideal organization of caste.

There is an accepted proverb in Hinduism that there are as many religions as there are men. Each man's spiritual needs are distinct; and the faith by means of which he lives, or the inner ordering of life which he builds up on the basis of that faith, are bound to be different, ever so slightly, from those of others.

This cultural pluralism, if we may use that term, was an important element of Hindu religion. And it has been our belief that it was not merely the non-competitive character of caste's

economic organization but also the cultural freedom associated with it which has given such a long lease of life to it in the midst of abundant political changes.

Ladies and Gentlemen, I am sorry that I have taken an inordinately long time in order to describe some of the important elements of Hindu culture with which we have been confronted in course of our anthropological studies. But let us now quickly pass on to the more vital question as to how to assess the value of these ideals. Are they good ? Should they be preserved ? Let us, therefore, deal a little more with the history of contemporary events.

There is no doubt that in India today a great moral urgency has arisen in both our social and political life. After having witnessed what is happening all over the world, how the application of science can potentially assure plenty for all mankind, how inequality hurts, we have set our minds upon the creation of a new civilization which shall be caste-less and class-less, and in which every man shall be assured of a decent standard of living, even if it may not be immediately one of plenty. In this moral adventure, we find that the desire to remain satisfied with a low standard of living, as in caste-bound rural India, is a serious obstacle. Many are of the opinion that there should be a healthy discontent ; also a unity of purpose which can only be assured by discarding cultural pluralism and having one culture instead. In the past, Nationalism tried to promote this monolithic cultural system in place of the numerous small cultures which kept a community divided within itself. Today, Socialism of one type or another has also come with its demand for commitment to the ideals of Humanism and Secularism which are to take the place of a new religion.

Although we have tried to present in outline two value-systems which have come into confrontation with one another in India today, let us look once more into the historical circumstances under which each system arose. About this a few hints have already been given in the previous paragraphs. Yet, we shall try again to gain a clearer understanding of the nature of their conflict from the historical point of view.

It appears to me that the ideal structure of caste was designed deliberately over a period of time when the problem was to incorporate a number of distinct communities into one social whole. Some of these communities were conquered, some were conquerors ;

while others were drawn into it by virtue of its productive efficiency in contrast to simpler modes of production prevailing among hunters and fishers or shifting cultivators. Under these circumstances, suppression of the competitive tendency was looked upon as a worthy ideal. Co-existence of cultures was encouraged. It was held that each culture represented only a fractional view of Truth, and moreover that these fractional views of Truth changed from time to time. Quite often efforts were made to define certain Eternal Truths ; but their interpretation by Colleges of Brahmins tended to vary in accordance with the needs of the hour. In such a society, conformity to established custom was promoted ; obedience encouraged. The State and family organization also encouraged this obedience. But in ancient times the organization of the State itself was weak ; so people obeyed the rules of a totalitarian society on religious grounds and by means of voluntary acquiescence. But if there was a freethinker, if anyone felt that his creativeness or inner being was cramped by subservience, there was a safety valve in the shape of *Sannyasa*. *Sannyasa* released a man from the bondage of society, if he was prepared to pay the price of freedom in terms of voluntary poverty, and a surrender of the desire for social security.

Today, after we have witnessed the achievements of Europe and America and also of the socialist countries all over the world, many Indian thinkers have begun to feel that free enterprise, the desire to break away from tradition, to deviate, are better exercises of the human spirit. Conformism is wrong, subservience to tradition is wrong, a commitment to secular values like the eradication of poverty and disease, a desire for increasing material prosperity, are better than a doubtful gain from subservience to an other-worldly religious ideal, or even the desire for personal emancipation from the bonds of sorrow by the pursuit of the goal of Spiritual Liberation.

It is also being increasingly believed that the desire to have a single homogeneous culture for the whole of India is better than another which encourages pluralism. A pluralistically divided society is weak in war. And what matters most in the present warring world is the capacity to survive. And thus co-existence of many fractional views of Truth is outdated, for we must forge a new unity for both economic development as well as for defensive purposes.

What I have been trying to suggest by the contrast presented above is that the values of traditional Hindu culture and the new ones towards which we have apparently been leaning are both *products of human needs as they have been modified under the pressure of historical circumstances.* The needs have not remained constant; but have themselves become altered on account of the pressures under which men live. Both of the value-systems are therefore valid and justifiable under the circumstances under which they arise and operate.

This is where an anthropologist finds it difficult to say whether one way of life, or one particular culture is superior to another or not. If a society grows big in population, if the seams of its civilizational coat begin to burst, the people concerned take recourse to new ways of life, to new values which would help them to survive and prosper. These new values may arise internally, or they may even be borrowed and adapted from other cultures. But at every stage, we discover that the members of a community try to ascertain the value of their own past and present ideals and compare them with one another, as well as the cultures of those with whom they historically come into contact.

When we look at their exercises at assessment, we begin however to realize that these assessments are *intensely coloured by the pressure of their emergent needs.*

It has often appeared to us that cultures cannot be arranged in a hierarchy, one being regarded as *superior* to another. They can of course be classified and arranged in a horizontal series. For the sake of comparison, one may refer to the subject of Human Ecology. An Eskimo builds up his culture according to the demands of his environment. So does a pastoral nomad in the desert, and a peasant who lives in the alluvial plain of the Ganga We can describe each ecological response, we can arrange them in a grade for purposes of classification and understanding. But is there an Absolute Measure in terms of which they can be evaluated? Are they not each right in their own environments? Yet, it must be admitted that efforts have been made at their evaluation. Some have been regarded as *better* than others. But if we examine these judgements carefully enough, we discover that the measuring rod which is applied is itself, almost in all cases, the product of the contemporary needs of the people or society which exercises the judgement.

Thus we are eventually confronted by a very difficult question : Can there be a totally objective comparison between values ? Can values be evaluated ? Can we arrange them for the sake of comparison like flowers torn away from their living context, from the context of the historical circumstances under which each has arisen ?

Let me confess to you frankly that I do not know the answer, although this is a question which has haunted me again and again as I have tried to understand and then compare one tribal culture with another, or one culture with a second one from which it differs significantly.

Even with regard to Hindu culture, every student knows very well that, in the past, there was a considerable *succession* of values. Not that each such new value became widely acceptable ; but when deviant values arose and became enshrined in the behaviour of small companies of men who formed sects, it meant that the established values, honoured by the largest number of men, were not sacrosanct. In other words, human life was not completely paralysed by blind obedience. It was capable all the time of throwing up deviations, which eventually could be the starting points of new patterns of behaviour, new beliefs, i.e. of a new culture altogether.

One can recall the conversation which Chaitanya is reported to have had with Rai Ramananda when the former first met him during his pilgrimage to the South. When Chaitanya asked Rai Ramananda, What should a man do in order to gain the Highest ? Rai Ramananda's reply was that the performance of one's duties as defined by the rules of *Varna* should be his highest aim. He should act unselfishly, and with a spirit of dedication to God. Chaitanya replied 'This is external, superficial. Say something which is deeper.' Rai Ramananda then proceeded to describe the attitudes and exercises of the spiritual aspirant, until finally he said that it is in our effort to realize the love which the Divine has for his Consort that the highest aim of human life is located.

To Chaitanya, obedience of the rules of society, and conformity, were only like the outer husk. It was the inner commitment to some transcendental value which he regarded as the supreme goal of life. *But if a man becomes committed to some such goal, is he any longer in a position to judge the little values of others ?* From his own point of view, Chaitanya regarded them as husk, hut the husk is of value

to the seed which grows and matures within. When growth is over, the cover which protected it becomes husk, becomes a bondage which has to shed. And the sooner this is done, the better.

It is perhaps from this point of view that we should look at cultures and their values as enshrined in institutions with an objectivity of mind. We have to lay aside the measuring rods furnished to us by our own society, or even by ourselves. And then we begin to realize that all cultures and all values to which men temporarily subscribe have a tinge of evanescence enshrined in them. And looking at it historically one ceases to judge, and feels overwhelmed by the succession of cultures or civilizations, both in space and in time, as an endless procession. One feels overwhelmed like Arjuna when Krishna opened up before him the sight of the Universe in flux ; a sight which frightened Arjuna and so he wanted it to be withdrawn, and replaced by the image of God *as he wished to see Him* : benign, friendly and merciful.

Perhaps History also opens up before us a vista which is no less disturbing than the one which Arjuna sighted. All that we are then left with is that *when we begin to understand, we cease to judge.*

THE PASUPATINATHA TEMPLE : NEPAL

AMITA RAY

(*Received on 22 August 1968*)

Abstract. The paper is a study in historical sociology of the temple of Pasupatinatha at Kathmandu, Nepal. It presents a few facts not known hitherto, drawn from archaeology and on-the-spot survey, and attempts, in the main, altogether a new interpretation of more or less known facts.

The main thesis of the paper is that the temple was originally affiliated to Tantric Saivism in which was incorporated elements of ritualistic practices derived from primitive and tribal religions. But by about the middle of the fifteenth century the nature and character of the temple underwent a change, especially in ritualistic aspects of worship of the main deity, the *Mukha-lingam* installed in the sanctum, at the instance of Bhattaraka Brahmin priests who were imported from South India by King Yakshamalla. Since that time the temple has to this day been under the control and protection of Bhattaraka Brahmins from the South, who still happen to remain a closed community marrying among themselves and having no social relations with the indigenous population of Nepal. The temple is thus a unique one in Nepal in ritualistic worship, its relatively purer *Smarta-puranic* Brahminical outlook, as distinguished from Tantric, its strictly Brahminical and priestly character and its exclusiveness. From the point of view of the Nepalese themselves the temple stands aloof and apart from the main stream of their life which is relatively free from the domination of caste and of priestly Brahminism, and is pervaded, so far as their socio-religious observances are concerned, by Trantric rites and practices.

The author is Lecturer in Ancient Indian History and Culture, Calcutta University. She worked for some time as Professor of Indian Culture in the Tribhuvan College, Nepal. Her personal address is 18 Ballygunge Station Road, 2nd Floor, Flat No. 3, Calcutta-19.

The paper seeks to find out the reasons of the uniqueness of the temple and of the features that characterize this uniqueness, by analysing available facts of history and archaeology and contemporary socio-religious data with special reference to socio-religious rites and practices that obtain at the Pasupatinatha and other temples of Nepal.

I

THE temple of Pasupatinatha holds a peculiar position in the religious life of Nepal. It is a shrine that enjoys the authenticity of antiquity and is held in great veneration by the people ; yet at the same time the shrine seems to stand aloof and apart from the general tenor and temper of their life. The priests of the temple are Brahmins imported from South India, who continue to maintain their marital ties within their closed community ; the *puja-vidhi*, that is, the rituals of worship that are current in this shrine are widely different from those that are usual in all other shrines in Nepal, including shrines that are dedicated to Siva-Pasupati. The shrine therefore presents an interesting study in sociological history, which this paper proposes to take up.

II

In the absence of any dependable record it is difficult to ascertain when the shrine of Pasupatinatha was originally built, or who the original builder was. The earliest authentic record known so far is an inscription of King Manadeva, dated Samvat 413, which refers to the installation of a *Siva-lingam* in the courtyard of Pasupati.[1] A little over half-a-century later another inscription of the reign of Vasantadeva and dated Samvat 455 refers to *Pasupati-kshetra*,[2] evidently as a holy site. The great Amsuvarman described himself as *Pasupatipadanugrihita*, blessed by the feet of Pasupati. He is also known to have been responsible for making a considerable number of donations to and for raising a number of smaller shrines around the main temple.[3] The main shrine thus seems to have come into existence not later than the middle or third quarter of

the fifth century A. D., evidently along the rising tide of *Smarta-puranic* Brahminism which seems to have made itself felt in Nepal in the context of close Indo-Nepalese contact. Indeed it seems clear that the cult of Pasupati-Siva was made popular in Nepal during the regime and perhaps by the kings of the Lichchhavi dynasty.

The sanctum of this shrine is occupied by a *Mukha-lingam* which, stylistically and iconographically, resembles the well-known *Mukha-lingam* of the Nachna Kuthara temple of early Gupta days. There is also an image of Pasupati which one now sees installed near the main gate of the shrine ; nobody seems to know its original position. Here too, its stylistic affiliation with the Gupta-Vakataka sculptural tradition, is unmistakable, though it may be somewhat earlier than the *Mukha-lingam* itself. This is nothing surprising in view of the fact that recent archaeological findings in the Kathmandu valley have confirmed what was somewhat vaguely recognized before, namely, that the Lichchhavis enjoyed very intimate relations with the Guptas on the one hand and the Vakatakas on the other, and that Nepal was in close contact not only with the Ganga-Yamuna region but also with the Deccan. That the Pasupatinatha temple had come to occupy an important place in the life of the people of the Kathmandu valley, at any rate, seems to be proved by the fact that during the rule of the later Lichchhavi kings villagers are recorded to have offered their voluntary services for the digging of a *maha-pranali* or moat around the shrine.[4]

The God Pasupati and his shrine seem to have enjoyed this support and patronage uninterruptedly for centuries. But unfortunately we do not have any evidence to tell us as to who the priests were, or what the rituals and the religious nature and character of the temple itself was.

But from a close study of the temple and some of the features of worship that persist even today, one can perhaps make a reliable guess as to what the nature and character of the temple was up to the middle of the fifteenth century.

A scrutiny of the architectural features reveals that on the second storey of the temple there is still a *Bhairava-chakra*

which definitely associates the temple at once with Tantric Saivism. Secondly, there are four supports of the main roof of the temple, and on each of these supports one can easily notice an image of *Unmatta Bhairava*, the specific iconographic feature of the image being *Meshambara*. This also at once affiliates the temple with Tantric Saivism. Thirdly, one of the most significant rituals connected with the worship of the main deity of the temple is as follows. The temple has four doors, one at each of the four cardinal points. Every morning these doors are opened at about eight, but before this formal opening is made the main deity is worshipped within closed doors by a Nepali priest who enters the temple by the western door and then closes it, and who happens to be a Vaisya (all Nepali Vaisyas of today were originally Sudras) by caste. The temple is thrown open to the public only when this early morning worship is over. Fourthly, one of the features of this early morning worship is the tying of a rope with the *Lingam* and taking the other end of the rope through an opening, about half a furlong away from the precincts of the temple, where offerings of liquor and animal sacrifices are made on special occasions. There can thus be hardly any doubt that at one time the temple was connected with Tantric Saivism as known and practised in Nepal.

The shrine seems however to have suffered a great set-back some time in 1350 A. D. when Shamsuddin, the then Sultan of Bengal, invaded Nepal and advanced to Kathmandu where he seems to have ravaged the temple, among other things, and ransacked it. The *Gopalarajavamsavali*,[5] a chronicle compiled perhaps in about the fifteenth century, refers to this incident as an unpleasant memory of the past ; but by the time of the compilation of the chronicle it had apparently already outlived the shock and was enjoying a new lease of life. This text affords an illuminating commentary on the socio-religious life of Nepal in the fourteenth century. It records that the divinity was held in great affection and devotion by the people. From its testimony it seems that Pasupatinatha was virtually, if not literary, the guardian deity of Nepal. But what seems more significant is the fact, casually mentioned in the chronicle,

that during the reign of King Yakshamalla (1150-80 A. D.) two Bhattaraka Brahmins were brought from South India in order to officiate as priests at the Pasupati shrine.[6] A later king, Jayasthimalla, is also known to have inducted two Bhattaraka Brahmins from the South, ostensibly to prepare a new codification of the social laws of the country, we are told. Any student of the socio-religious history of Nepal knows that it was from about this time that one starts noticing the slow but steady beginning of a kind of social stratification based on the traditional Indian system of caste to which the earlier Buddhist-Brahminical society of Nepal fell an easy prey, perhaps slowly and gradually but inevitably. The inference becomes irresistible that the social pressure which was responsible for the induction of Bhattaraka Brahmins from the South for officiating as temple-priests and for a new codification of social laws, was also responsible for the introduction of a neo-Brahminical culture of mediaeval South Indian imprint, based on the system of Brahminical priesthood and of caste.

It may not be idle to speculate as to the reason why it was found necessary to import Bhattaraka Brahmins from South India as temple-priests or as codifier of socio-religious laws. Was there any historical or sociological reason for doing so ? In the absence of any factual data one can only try to build up a working hypothesis.

III

Nepalese society, it is well known, affords a unique example of the co-existence of Buddhism and Brahminism in a manner which has hardly any parallel anywhere else in South and South-east Asia, and this even from earliest recorded times. Parhaps Bihar and Bengal of the time of the Palas, more specifically of the early Palas, approximated somewhat to what one may reconstruct of Nepalese society, not only in early mediaeval centuries but also later on down to our own times. One knows too well that Amsuvarman of the seventh century was an ardent Saiva, a devotee of Pasupati, who made a number of donations to Buddhist *viharas*. Epigraphic evidences of this nature are however very infrequent in Nepal, but what is more

significant is the evidence of archaeology which clearly demonstrates the unmistakable co-existence of the two religions. In any important religious establishment in Nepal that has been in continuous existence through the centuries, one finds not only Buddhist and Brahminical shrines standing side by side, but also the divinities of both the cults co-mingling in such shrines in a manner that one does not usually find elsewhere in India or in South-east Asia. Indeed, if one observes carefully one easily finds that an average Nepalese hardly makes any difference between an image belonging, iconographically or ideologically, to Buddhism or Brahminism ; both have the same meaning and significance in so far as he is concerned, and he is not even conscious that historically speaking they owe their origin and evolution to differing social and ideological situations, nor of the fact that both the religions had woven into the texture of their behavioural pattern, a great deal of beliefs, rituals and practices of primitive religions of pre-Buddhist and pre-Brahminical days. Historically speaking, the introduction of Buddhism seems to have preceded that of Brahminism by a few centuries, and even after this introduction, both flourished side by side, which certainly means that they had a considerable support among the people, that is, enjoyed a wide social base. The fact that we do not have court documents to support this contention has to be explained by another fact that the court was more often than not Brahminical, either Saivite or Vaishnavite. But apart from the evidence of Buddhist sculptures and paintings, any social survey would show very clearly that people in general were, through the ages, and even now are, very firmly rooted in the traditions and practices of Buddhism. Yet at the same time perhaps because of continued co-existence and co-mingling and perhaps also because of the primitive base of certain ideas, beliefs, rituals and practices the Buddhists, that is, the devotees of Buddhist gods and goddesses, could easily take to the gods and goddesses of the Brahminical pantheon and the rituals connected with their worship. This process, slow but steady, seems to have been at work through the centuries,

and the vast generality of people became 'Hinduized without being Hindus'. In the process what was silently achieved was a unique syncretism of cults, primitive, Buddhist and Brahminical, an equally unique harmonization of beliefs and practices, and what is more important, evolution of common rituals of worship. Thus was evolved a homogeneous socio-religious culture in Nepal which was not disturbed even when Brahminical cults, mainly Saiva and Vaishnava, but at a later stage also Sakta, introduced themselves and staged movements of revival with some amount of vigour. In fact, through the centuries, Nepal seems to have worked out a peculiar syncretism out of the ritualistic practices, and perhaps also of beliefs of Siva and Sakti cults on the one hand and of Vajrayana Buddhism on the other.

Yet a stronger and much more pervasive socio-religious force was yet to come, which by bringing together and synthesizing apparently disconnected facts and fragments of experience of life into one whole, removed altogether whatever vestiges of isolation and segregation were still there in the socio-religious life of Nepal. This force was represented by the Tantra which came to pervade all Buddhist and Brahminical cults. The synthesis that we have just spoken of had already been achieved when Sultan Shamsuddin struck at the Pasupatinatha temple in 1350 A. D. and perhaps somewhat long before Bhattaraka Brahmins were brought from the South as temple-priests and codifiers of socio-religious laws.

One of the potent factors that may have helped this synthesis was the caste-less character of the society, presumably a contribution of tribal society and of Buddhism. One significant fact in favour of this assumption is that even today temples and religious shrines in Nepal are in general free from the dominance of Brahminical priests and all temples are open to all castes and creeds. A second significant fact is that caste as a social phenomenon is practically absent among the indigenous elements of the population but happens to be an important factor in the life of those whose ancestors had entered Nepal as immigrants from India at different periods of time.

The Pasupatinatha temple today presents however a situation that belies this picture of Nepalese society. Even a casual observation of day-to-day life at the temple would reveal to any one that the countless people who come to this temple to offer worship, do not actually act and behave as active participants as they do in other temples, but they stand somewhat aloof and apart as silent but devoted and respectful observers. They do not take any part whatsoever in the rituals of worship ; indeed they are not allowed to. Secondly, the priest here is invariably a Bhattaraka Brahmin who alone has the right of entry into the *garbha-griha*, a feature which is unknown in any other temple in Nepal. Thirdly, this is the only temple in Nepal which is open 'Only for the Hindus', the term 'Hindus' here fortunately does not exclude Buddhists. But even so, this kind of exclusiveness and segregation are features which are not usual in Nepalese society nor are they recognized by the Nepalese people as anything but very exceptional.

IV

What has been stated above perhaps gives a sure indication that in the context of Nepalese society the Pasupatinatha temple, as we see it today, is a unique phenomenon, but it does not offer any clue as to why and how it came to acquire this character, nor does it explain why it was considered necessary to induct Bhattaraka Brahmins from the South to act as priests of this temple and to prepare a codification of the socio-religious laws of the country, presumably on the basis of caste as known and practised in India. One cannot miss the fact that Jayasthimalla who is said to have brought the Bhattaraka Brahmins to codify social laws is also credited with having reorganized contemporary Nepalese society on the basis of as many as eighty-five castes. One may therefore try to find an answer to this why and how.

Religion as practised in Nepal is nothing but a series of rituals that have also a secular or even domestic significance. Gods and goddesses and spirits, both benevolent and malevolent, maintain a very intimate relation with the day-to-day life of the people ; they are supposed to nourish

and satisfy their magical faiths and superstitions as much as their material desires and aspirations. The daily round of an average Nepali is inextricably mixed up with spirits, gods and goddesses and with the rituals connected with their worship, and these rituals are performed with as much faith and devotion as joyousness and festivity of spirit. Indeed the home of a Newar always wears a festive appearance ; their socio-religious ceremonies are almost invariably marked with offerings of liquor and sacrifices of domestic animals. Ceremonial processions or *yatras*, festive gatherings or *samajas* etc., are essential features of such ceremonies in which temples also play an important part. There the people gather and share their joyous abandon with the gods, goddesses and spirits, unconscious of their sectarian affiliations. Indeed, their cycle of life is all but associated with their gods, goddesses and spirits. The birth of a child, the initiation of a boy, the marriage of a young couple, for instance, are all celebrated in temples and often without a Brahminical priest. An analysis of the rituals connected with such ceremonies would show that they are replete with primitive and tribal beliefs and practices of local origin, synthetised with the Brahminical and Buddhist magical ritualism of the Tantra.

Tantra was indeed the most dominant and pervasive factor in the religious life of Nepal from at least the tenth and eleventh centuries of the Christian era. This is proved not only by the evidence of a very large number of Tantric texts found in Nepal but also by an equally large number of sculptures, bronzes and paintings showing unmistakable Tantric influences. It was from about this time also that there started coming into vogue a number of esoteric cults and practices all based on the simple theme of Purusha and Prakriti or Siva and Sakti or Buddha-Bodhisattva and Tara, as interpreted and understood in terms of Saiva Tantra or of Vajrayana, both of which incorporated many elements of magical practice of primitive and tribal origin. Speaking from the point of view of ritualism there was not much of a difference between the rituals and practices connected with the worship of gods, goddesses and

spirits of the Siva-Sakti pantheon and of Vajrayana. Thus was evolved in Nepal a common and unified system of ritualism and a common pantheon of gods, goddesses and spirits. Rajendralala Mitra, in his *Sanskrit Buddhist Literature in Nepal*, refers to a text on rituals of worship, *Puja-paddhati*, which mentions as many as twenty-six Brahminical divinities freely absorbed in the Vajrayana pantheon. Vajrayana indeed seems to have acted in Nepal as a great unifying and synthesizing force. In a situation of this kind, cult affiliations, understandably enough, came to play a very secondary role. Apart from this, Tantric esoteric cults may have also affected society in Nepal to some extent as they did elsewhere, in eastern India, for example. The total socio-religious situation was thus one which could not have been very welcome from the point of view of orthodox and puritanic Brahminism. Indeed, from such a point of view, these must have been considered somewhat degenerate.

It may perhaps safely be presumed that when Yakshamalla acted in the way he did, he was only trying to make the Pasupatinatha temple, the seat of the presiding deity of Nepal, a place of pure and orthodox Brahminical worship of the *Smarta-puranic* type. He wanted to keep the Pasupatinatha temple unsullied by all sorts of magical and Tantric ritualistic practices. His late successor, Jayasthimalla, seems to have gone a step further, namely, that he wanted to bring about a reorganization of society itself.

But in trying to do what they wanted to, why did both of them turn to the South ? Perhaps they had a very valid reason for doing so. They could not turn to eastern or western India or to the Indo-Gangetic plain where socio-religious conditions within the fold of Hinduism were very much the same and where, besides, an altogether alien social and religious group was in power. They could therefore only turn to the South. But they seem to have had better reasons for doing so.

It is common knowledge that in the southern region of this vast land, a general movement of reformation and revitalization of Hinduism was going on from about the ninth

century A. D., evidently as a result of the Sankaracharya movement, and reformer after reformer was making his life and work felt in the socio-religious life of the people. In the process many of the evils that had in the meantime crept into Brahminical Hinduism were being swept aside, temples were being cleansed of all undesirable rites and rituals, priesthood purified, and the new monastic orders that were coming into being came to wear a new garb, austere and puritanic. Indeed, by about the thirteenth and fourteenth centuries the South came to be regarded as the home of purer forms of Brahminical Hinduism, and saints and religious leaders of the North started looking towards this region for inspiration and guidance. Chaitanyadeva of Bengal in the sixteenth century was not certainly the only person to do so. History records that almost all the major reformist movements and protestant leaders of mediaeval India, within the fold of Brahminical Hinduism, came from eastern India and western Deccan. The priests of the South and western Deccan were actually considered to be purer and more knowledgeable about the tenets and rituals as well as about the laws and customs regulating the Hindu social order.

It was perhaps this background of Indian socio-religious life of the times that prompted Yakshamalla and Jayasthimalla to turn to the South for purifying the Pasupatinatha temple and regulating anew the contemporary social order of Nepal. While the attempt of Yakshamalla seems to have succeeded in so far as even today the temple of Pasupatinatha stands away and apart from the main stream of socio-religious life of the country, its priests and protectors are southern Bhattaraka Brahmins even to this day, and the rituals connected with the worship of the deity are simpler and purer, the attempt of Jayasthimalla does not seem to have had any but marginal effects in the long run.

V

We have just said that the Pasupatinatha temple with its Bhattaraka Brahmin priests and simpler and purer form of ritualistic worship stands away and aloof from the main

stream of the socio-religious life of the community. But what does it mean actually from the point of view of Nepalese life and society as they manifested themselves in the domain of religion ?

From what has been said above it is clear that the temple does not and cannot have any very potent social function. Its priests live a life of their own ; they have indeed no social relationship with the local people. Secondly, though the temple is visited by a large number of people who come to offer their worship the worshippers have no sense of participation in the act of worship. Ordinarily, the rituals of worship in Brahminical Tantric Hinduism in Nepal, as in India, as well as in Vajrayana Buddhism, amounts to propitiating the gods, goddesses and spirits with offerings of flowers and fruits, sandal-paste, rice or some other corn, *panchamrita* or a nectar-mixture of milk, curd, honey, sugar and *ghee* or clarified butter, incense and light (*dhupa* and *dipa*). Sacrifice of animals may also be one of the items, and fermented liquor another, depending upon whether the devotee is an adherent of one of the Tantric cults or not But the *puja-vidhi* of Pasupatinatha is altogether different. Here no offering except flowers is admissible, along with *dhupa* and *dipa*, and within the temple area no special ritual is allowed. Meat, fermented liquor, eggs etc., which are favourite and almost indispensable offerings of the Newars in other Saiva and Sakta temples, are strictly forbidden at the Pasupatinatha temple where the ritualistic worship starts with the utterance by the priest of Vedic incantations, a thing which is very unusual in any other temple of Nepal. This temple, by thus prohibiting the popular rituals of worship, has also kept out the people whom it is meant to nourish and sustain.

One final point of consideration. Pasupati is recognized in mythology, art and iconography as an aspect or form of Siva, perhaps his earliest form, archaeologically speaking. In the Pasupatinatha temple this deity is represented in the form of a *Mukha-lingam*, a sophisticated later iconic development of what was originally a fertility symbol. In India, or even elsewhere in Nepal in any Saivite temple where there is a

Lingam installed in the sanctum, the representation and worship of the Devi in any or more of her manifestations, is not only permissible, but positively welcome. In most such temples the Devi is an associate divinity, for Siva, in his *Linga* form, cannot be, understandably enough, disunited from her. But not so here in the Pasupatinatha temple where even her worship is prohibited. Indeed, neither in the rituals nor in the invocations is there any indication or suggestion even of the fertility significance of the *Lingam*, and hence no trace of rituals of primitive or tribal origin and association. The Pasupatinatha temple stands in the *deopatan* (*devapattan*) area. In the same area stands another, almost equally important temple, that of the Guhyesvari where one can easily see how rituals of primitive and tribal origin and association were creatively synthesized with the conceptions and forms of Brahminical deities and with the rituals of their worship. Indeed, the deities and the rituals of worship in any temple in Nepal, Buddhist or Brahminical, are evidences of this synthesis. The Pasupatinatha temple is perhaps the one and only exception.

The occasion of *Sivaratri* is a very special one at the Pasupatinatha temple. A festival is held on that occasion every year, and it draws thousands of people, indeed the biggest crowd that ever assembles in any Nepalese temple. But even a casual observer cannot fail to notice that a very large section of this crowd consists of pilgrims from India and the *terai* region of Nepal, and the indigenous people of Nepal, especially the Newars, extend but a very cold recognition and reception to this ceremony. The only part of the ceremony in which there is some joyous participation by them is the big bonfire at the cross-roads, marking perhaps the end of the bitterly cold days of winter. But ordinarily speaking this should not have been the case, since to the average Nepali *Sivaratri* is an auspicious occasion, especially for the womenfolk who want to propitiate the god Siva by fasting for the day and worshipping him at night with a view to seeking his boon for their husbands and children, and an average Newari is usually very prone to such ideas. But

the fact remains that the Newars do not seem to attach much importance to this festival. The sections of the people who do so and participate in it fully are the caste-Hindus who at one time or other in the long history of the country, seem to have come into Nepal from India.

NOTES

1. Gnoli, R. *Nepalese Inscriptions in Gupta characters*, No. VIII.
2. *Abhilekha Samgraha*, I, p. 26. Itihasa Sambodhana Mandala.
3. Gnoli, R. op. cit. Nos. XXXV-XXXIX ; XLI-XLIV.
4. Gnoli, R. op. cit. Nos. 1-LII.
5. *Gopalaraja Vamsavali.* Folio 28(b). *Journal of the Bihar and Orissa Research Society*, Vol. XXII, p. 95. 1936.
6. *Gopalaraja Vamsavali.* Folio 59(a) ; 29(a) ; 62(b) and 63(b).

BIBLIOGRAPHY

1. Dutta, N. K. — Buddhism in Nepal, in *Bulletin of Tibetology*, Vol. III, No. 1. Gangtok. 1966.
2. Gnoli, R. — *Nepalese Inscriptions in Gupta characters*. Rome. 1956.
3. Haimendorf, F. V. — *Caste and Kin in Nepal, India and Ceylon*. Bombay. 1966.
4. Haimendorf, F. V. — Elements of Newar Social Structure, in *Journal of the Royal Anthropological Institute*, Vo. 82. London.
5. Landon, P. — *Nepal.* London. 1928.
6. Levi, Sylvain — *Le Nepal.* Paris. 1905.
7. Mukherji, P. C. and Smith, V. A. — *A Report on the tour of exploration of the antiquities in the Tarai, Nepal.* Calcutta. 1901.
8. Petech, L — *Mediaeval History of Nepal.* Rome. 1958.
9. Regmi, D. R. — *Ancient Nepal.* Calcutta. 1960.
10. Regmi, D. R. — *Mediaeval Nepal.* Calcutta. 1965-66.
11. Wright, D. — *History of Nepal.* Cambridge. 1877.

A NOTE ON THE SOCIOLOGY OF BUDDHIST TANTRISM

MALATI J. SHENDGE

(*Received on 26 October 1968*)

Abstract. This is an experiment to solve problems faced by a Buddhologist by resorting to sociological analysis. In this analysis, two technical difficulties emerge : (i) The source material will be mainly collected from extant Buddhist Tantric literature as Buddhist Tantrism is no longer a living force. Can the sociological techniques which are primarily based on observation of existing societies be applicable to societies of the past ? (ii) The establishment of a technique which treats Tantrism as a comprehensive system. That in itself is a big task.

Preliminary Remarks

IT remains a controversial issue as to who would be more fit to undertake the type of work proposed to be done here—a sociologist or a Buddhologist. Both specialists suffer from certain handicaps.

While trying to understand Tantrism, I have come across a number of problems which either for lack of enough material have been left unsolved or in cases where some solutions have been offered, they were found unsatisfactory and inadequate. The proposed project will attempt to solve some of these problems by resorting to a method in which sociological analysis will be correlated to the historical accounts of the period and the recent findings of archaeological excavations carried on in areas like the Swat Valley in Pakistan where Buddhist Tantrism flourished in ancient days.

The author is Fellow, Indian Institute of Advanced Study, Rashtrapati Nivas, Simla – 5 (H. P.)

Tantric Sources

As far as the Tantric sources are concerned the material will be collected from the extant Tantric literature in Sanskrit and in Tibetan translations of Sanskrit works, or works written in Tibetan on India.

(i) Tantras : their theory and practice.

(ii) The accounts of the lives of the Tantric saints or *siddhas*, of which at least three versions are available in the bsTan-hgyur. The published version of Taranath's work could also be used.

(iii) Histories of Buddhism in India and Tibet written by Indian and Tibetan writers. In this may be included the historical works of Taranath, Buston, Sum-pa-mkhan-po, gSon-nu-dpal, Kun-dgah-rdo-rje, and others.

(iv) Records like *pothis* and *bahis* kept at the various Tantric shrines.

These materials could be supplemented by other relevant materials.

Scope of the Note

The purpose of this short note is to test certain ideas about possible sociological analysis and as such no final formulation of questions is attempted. So also the data for analysis has been selected and limited. Only some salient features of Buddhist Tantrism and certain questions as to the picture of society in which the Tantrics functioned are discussed.

Though scholars have accepted two varieties of Tantrism, namely, Buddhist and Hindu, no satisfactory attempt has been made to define the exact nature of Tantrism, the place, time and causes of its origination and the causes of its assimilation by Buddhism and Hinduism. Here I shall confine myself to the discussion of the salient features which characterize Buddhist Tantrism.

Salient Features of Buddhist Tantrism and their Sociological Analysis

The salient feature of Buddhist Tantrism seems to be the use of sense-experience as a means towards the attainment of Nirvana. The Tantric practician is told again and again not to undergo any hardship nor to curb his desires in order to attain Nirvana. Nirvana can be attained through the fulfilment of the five senses. This is directly opposed to the doctrines of other religious systems which have always considered sense-experience as a hindrance to spiritual experience. Could this be called a case of ideological opposition ?

This sense-experience is sought through material fulfilment of different kinds : for example, the consumption of wine and five kinds of meat is advocated. Music and dance are not eschewed. Intimate company of women is given supreme place. Not only this, but the free expression of emotions and their transference into action is emphasized. All these observances are in complete opposition to those of certain other religious sects, including early Buddhism.

A detailed investigation of the social status of the practician and his relationship with women will bring to light the following facts. As far as the former is concerned, it may be said that many of the *siddhas* came from royal families but also there were many others coming from Brahmin and Kshatriya families. The occupational castes of some are also mentioned. But curiously enough in the Tantras themselves, the caste or social status of the practician is not mentioned, which may mean that by establishing relations with the Tantric, the individual really broke away from all social hierarchy and ties and that is perhaps the reason why the mention of social status was not thought relevant. Now to consider the latter, i.e. his relationship with women : It is often said that he should contemplate in the company of *brahmani*, *rajaki* (washer-woman), a dombi (a low-caste woman), *candali*, *antyaja* (women of lower castes) or tribal women like a *kinnari*, a *yaksi* or *asuri*. In fact, in general, woman's company should be sought. Conceptually the reason that is given is that women

are the embodiment of Prajnaparamita. Taking this in its literal sense, ordinarily the ways adopted to express the reverence felt for the embodiment of Prajnaparamita would be exactly the opposite of those adopted by the Tantrics. Looking at this in the social context, two explanations are possible. (1) Does it point to the fact that perhaps Tantrism was a religion of the lower strata of society, especially lower-class women being the carriers of the cultic practices which were later adopted by the higher classes ? (Not infrequently does one hear about the king or prince being initiated by the brandy-selling woman or swine-keeping woman.) This could be one kind of movement, i.e. from the lower to the upper. In the observance of certain rituals, especially the initiation (*abhiseka*) which was supposed to be originally the coronation ceremony (*cakravartyabhiseka*) performed at the time of assuming royal power, one can perceive the movement from the upper to the lower. Could this point to real social intercourse and interchange between various strata of society at the time when Buddhism assimilated Tantrism into its fold ? (2) Assuming that a society with rigid caste system would forbid relations with women outside the caste, the Tantrics ran counter to this by asking the followers to have relations with women irrespective of social status or caste. Thus the Tantric code of conduct runs opposite the usual social norm. Another relevant feature that may be mentioned in this connexion is that the practician is always urged to contemplate in close company of mother, daughter, sister and niece, so that he should attain *siddhi* quickly. Once again in the normal social code, these are exactly the female relatives with whom it is immoral to have sexual relations. The norm of behaviour of the practician as a member of a religious group is opposed to the norm of behaviour socially prescribed. Also this deprives the woman of all social and familial status in the context of the Tantric group. She stands there in his eyes as an object, at once above the society (as an embodiment of Prajnaparamita) as well as out of the society. She is a non-social entity used as an instrument.

From this analysis it follows that the Tantrics, on the one

hand, opposed ideologically the pattern of religious life by introducing the sensual experience as a means of attainment of Nirvana and, on the other hand, as far as the social norm of behaviour was concerned, they freed themselves from all moral obligations by considering woman as a non-social entity. It remains to be seen what kind of society would give rise to and tolerate the existence within itself of such groups.

Another problem that poses itself is in connexion with the functional levels of the Tantric practician. Did he function on two different levels, namely, the level of the Tantric group and the level of the society ? Could he be a member of both without any disharmony ? In the lives of the *siddhas*, there are instances of a *siddha* being persecuted by the king who found him in the embrace of a 'low-caste' woman. But after the persecution, the king relents because of the supernatural powers of the *siddha*. In other words, society still expected adherence to its norms of behaviour from the *siddhas* and ordinary citizens alike, although an exception was made in the case of the *siddhas* by the recognition of their supernatural powers. In this connexion, attention may be drawn to a modern document, namely, the Kinsey Report on the sexual behaviour of the adult American male. There, a member of a civilized community can and does satisfy his *abnormal sexual* urge in a way which he screens off from public gaze, while outwardly he conforms to the behaviour-pattern approved by society. In other words, he functions both as a normal citizen and as an individual with certain urges. In the case of the Tantrics, their normal sexual behaviour itself was institutionalized, but what was institutionalized was different from that followed and approved by society at large.

Looking at the historical development of Buddhism, it remains to be seen why an intellectual religion of the higher classes like Buddhism allowed in its fold religious practices predominantly ritualistic, emotional and probably a product of the lower strata of society. The assimilation of the rituals, various ways of worship and use of sense-experience as a means of gaining spiritual experience changed the character of Buddhism completely. The originally monastic, intellectual and aristo-

cractic religious system suddenly opened itself to the masses. The answer of this change must lie in social change. Or was it an attempt to come to terms with Hinduism while maintaining its identity ? Did this contribute towards its disappearance from India ? Also, could it be said that Tantrism was an answer to a problem faced by a society which could neither forego the fulfilment of the senses nor help being preoccupied with the spiritual quest ?

The Tantric practices are primarily meant to transform the individual practician and as such have psychological implications As the preoccupation of the sociologist is to establish patterns of relations between individual and the group, the philosophical basis and psychological implications or consequences of these practices are practically left out of consideration. It might amount to treating Tantrism as a bundle of esoteric practices, which it is not. It is a whole system of thought and has to be treated as such. This can be done only by correlating the philosophical, psychological and sociological factors into a composite whole.

These are some indications of the interaction of society at large and Tantric ideology and behaviour as its outcome in the past. As far as Indian society is concerned, Buddhist Tantrism has long ceased to be a living force directly. But many practices of Tantric origin still have a meaning for Indians. In the northern border regions of India and in Nepal, Bhutan and Sikkim, it is still a living faith. It would be interesting to see how Tantrism has affected these societies. For example, in Nepal, where Tantrism is still practised extensively, there is a separate caste of Vajracaryas known as *Banjras.*

It would also be interesting to consider the implications of the youth movements in U. S. A. like hippies, yippies or the widespread practices like those of wife-swapping. The point here is whether these and such movements could carry in them the germs of Tantric practices. The striking difference between these movements and Tantrism is the absence of a transcendental spiritual goal in the former.

GENETICS OF MEDULLARY STRUCTURE OF HUMAN HEAD HAIR

A. R. BANERJEE

ASITBARAN DAS-CHOUDHURY

(*Received on 30 August 1968*)

Abstract. In an attempt to find out the genetic significance of medullation of human head hair, samples of 25 pairs of German twins comprising both monozygotic (EZ) and dizygotic (ZZ and PZ) twins were studied. Strong genetic component of variability was found to be responsible for the manifestation of medullary character of human head hair.

MORPHOLOGICAL characteristics of human head hair as one of the criteria for racial study has long been recognized. But apart from it, human head hair is said to have certain histological peculiarities which are frequently used in personal identification. Hausman (1934), Kirk (1940), Trotter and Duggins (1950) and Banerjee (1963) attempted to evaluate the nature and significance of the above characters for that purpose.

Browne (1853) classified the various races of mankind into groups according to the cross-section of the hair shaft. This view was later on extended by Pruner-Bey (1883) who attempted a correlation of hair form with cross-section and medullation of the shaft. The validity of cross-section is now open to question since Hausman (1934), Steggerda (1940), Keneberg (1935), Seibert and Steggerda (1942), Trotter and Duggins (1948), Schaeuble (1958) and Vernall (1961) have shown the existence of high variabilities in the measurable characters of the cross-section. Interest has, therefore, been extended to other histological characters of the shaft such as diameter, medullation and pigmentation.

The authors' address is C/o Department of Anthropology, University of Calcutta, 35 Ballygunge Circular Road, Calcutta–19.

Of the histological characters of human head hair medulla received the foremost importance and its study has largely been undertaken by American authors. Much of it is due to Hausman (1924-25) and Wynkoop (1929) for their initial classification of medulla.

The relationship between medulla and diameter of hair shaft was studied firstly by Oesterlene (1874) and later on confirmed by Hausman (1924-25) and Wynkoop (1929). Wynkoop (1929) and Hausman (1930) noted that the presence or absence of medulla as well as its type is in direct agreement with the diameter of the hair shaft. Hair shaft with largest diameter possesses continuous medulla frequently. But Duggins and Trotter (1950) failed to obtain any correlation between the occurrence of various medullary types and diameter and also with the age. Banerjee (1963) noted the individual variation in the occurrence of different medullary types and hair diameter. Association of the medullary types with different hair forms was studied by Banerjee (1957, 1959, and 1965) where frizzly and woolly hair showed the highest incidence of absence of medulla while the straight hair showed the highest incidence of continuous medulla.

Medullary structures thus appear to have been studied mainly with respect to age, diameter and hair form. It appears from the above that the hereditary significance of medullation as well as other microscopical characters of human head hair has yet to be known. How far the medullary structures and other microscopical structures of hair shaft are controlled by the genetic component of variability and how far by the non-genetic ones has yet to be thoroughly investigated.

With this end in view an attempt has been made to find the role of the genetic and the non-genetic component of variability in the manifestation of medullation, hair diameter, hair length and other histological characteristics of hair shaft. The result of investigation on the genetic significance of medulla has been reported in the present communication. The findings of other investigations will be communicated subsequently.

Material and Method

Material for the present study consisted of the hair samples from 25 pairs of German twins comprising the monozygotic (EZ), the same-sexed dizygotic (ZZ) and the different-sexed dizygotic (PZ) twin pairs. All the samples were collected by one of us (A. R. B.) in the Institute for Human Genetics, Münster, Germany. The zygosity of the twins was established through the similarity method of diagnosis supported by detailed serological tests (ABO, Rh, MNS, P, Kell, Gc, Gm, HP). All the samples were cut close to the scalp following Pinkus (1927).

Details of the samples studied for the present purpose have been given in the following table.

TABLE 1

Number of samples according to their sex and zygosity.

Twins		Sex			Total
		MM	FF	MF	
Monozygotic (EZ)		5	5	–	10
Dizygotic	Same-sexed (ZZ)	5	5	–	10
	Different-sexed (PZ)	–	–	5	5
Total		10	10	5	25

Average age of the male and the female twins included in the present study was 12.1 and 13.9 years respectively.

After properly cleaning the samples, 25 strands of hair from each of the individuals were studied in a similar method described earlier (Banerjee 1965). Thus the total number of strands studied in the present investigation was 1250.

The three-fold classification of medulla proposed by Banerjee (1965) was followed.

Percentile occurrence of different types of medulla in each of the individuals of the three categories of twins classified according to their sex has been given in Tables 2, 3 and 4.

TABLE 2

Percentile occurrence of the different types of medulla among the monozygotic (EZ) twin pairs.

Twin Nos.	Pair Nos.	Male Medulla Absent	Male Medulla Discontinuous	Male Medulla Continuous	Female Medulla Absent	Female Medulla Discontinuous	Female Medulla Continuous
1	I	44	56	–	40	60	–
	II	52	48	–	40	60	–
2	I	20	80	–	52	48	–
	II	16	84	–	72	28	–
3	I	28	72	–	8	92	–
	II	60	40	–	20	80	–
4	I	72	28	–	96	4	–
	II	76	24	–	84	16	–
5	I	40	60	–	12	88	–
	II	56	44	–	12	88	–

TABLE 3

Percentile occurrence of different types of medulla among the dizygotic same-sexed (ZZ) twin pairs.

Twin Nos.	Pair Nos.	Male Medulla Absent	Male Medulla Discontinuous	Male Medulla Continuous	Female Medulla Absent	Female Medulla Discontinuous	Female Medulla Continuous
1	I	20	80	–	76	24	–
	II	64	32	4	12	88	–
2	I	64	36	–	64	36	–
	II	96	4	–	20	80	–
3	I	52	48	–	36	64	–
	II	84	16	–	72	28	–
4	I	56	44	–	44	56	–
	II	40	60	–	48	52	–
5	I	52	48	–	20	80	–
	II	32	68	–	64	36	–

TABLE 4

Percentile occurrence of the different types of medulla among the dizygotic different-sexed (PZ) twin pairs.

Twin Nos.	Pair Nos.	Sex	Medulla: Absent	Medulla: Discontinuous	Medulla: Continuous
1	I	M	72	28	—
	II	F	72	28	—
2	I	F	8	76	16
	II	M	16	84	—
3	I	F	100	—	—
	II	M	72	28	—
4	I	M	8	92	—
	II	F	36	64	—
5	I	F	4	96	—
	II	M	36	64	—

It will be seen from the tables above that the incidence of medulla among the partners of the monozygotic (EZ) twins does not differ much from one another. Among both the sexes of the monozygotic (EZ) twins the difference in the occurrence of the different types of medulla between the two partners appears to be smaller than those of their dizygotic same-sexed (ZZ) and different-sexed (PZ) counterparts.

The intra-pair differences in the percentile occurrence of the medulla among both sexes of the three categories of the twins (EZ, ZZ and PZ) have been presented in Figure I.

It will be seen therefrom that the monozygotic (EZ) twins show the least differences compared to those of the dizygotic same-sexed (ZZ) and different-sexed (PZ) ones.

INTRA-PAIR DIFFERENCES IN PERCENTILE OCCURRENCE OF THE MEDULLA.

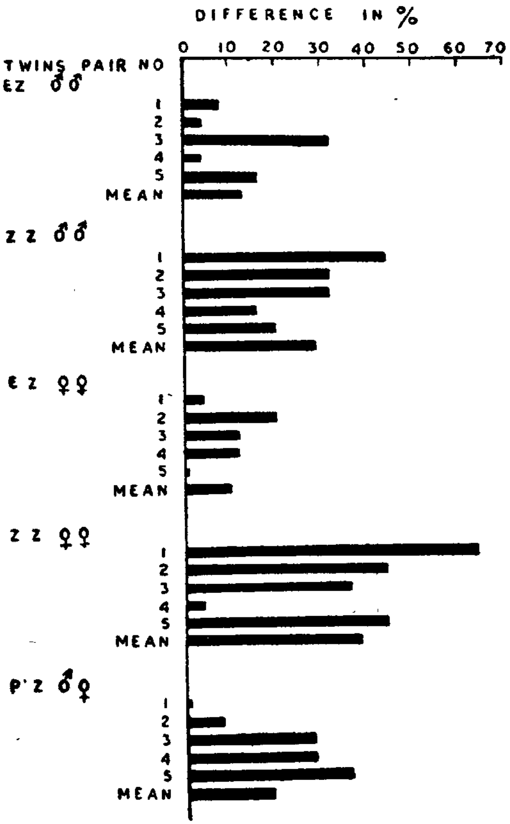

FIG-1

The mean intra-pair difference in the percentile occurrence of medulla has also been calculated on the basis of zygosity for each category of twins (EZ, ZZ and PZ) and has been presented in Figure II.

THE MEAN INTRA-PAIR DIFFERENCE IN PERCENTILE OCCURRENCE OF MEDULLA

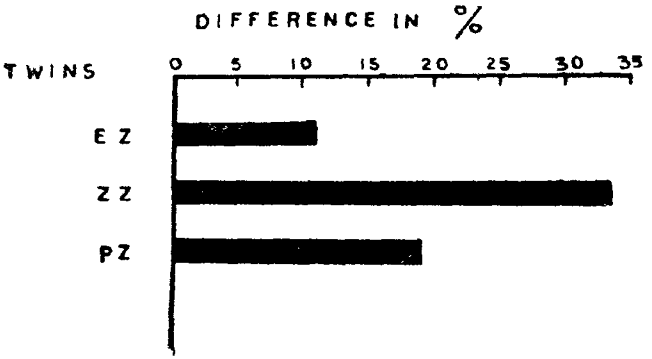

FIG-II

It will be evident from that figure that mean intra-pair difference in medullation among the monozygotic (EZ) twins is found to be the least (11.20%) compared to those of the dizygotic same-sexed (ZZ) (33.60%) and different-sexed (PZ) (19.20%) ones.

Discussion

Von Vercshuer (1939) observed that the objective of twin analysis is to find out the interaction of heredity and environment with regard to the complex and quantitative inheritance in man. The presence of genetic component of variability is generally ascertained by comparison of the average of the differences between the two members of the monozygotic twin pairs to the average of the differences between

the two members of the dizygotic twin pairs. This comparison has been done in the present study on the basis of the mean intra-pair variances (Osborne *et al.* 1958 and 1962) of the medullary ratio.* The mean intra-pair variances of medullary ratio of monozygotic (EZ) and dizygotic (ZZ) twin pairs were calculated and these variances were compared by using the 'F' tests.

---

* Medullary ratio was calculated as follows: Medullary ratio = M/n, where M is equal to total number of medullated hair and n is the total number of strands studied. Thus the value of medullary ratio is bounded by 0 and 1.

TABLE 5

Mean intra-pair variances of the medullary ratio.

Zygosity	Sex	No. of twin pairs	Variance	F ratio	P
EZ	M	5	.013		
				3.38	<.20
ZZ	M	5	.046		
EZ	F	5	.006		
				15.33	<.05
ZZ	F	5	.092		
EZ*		10	.010		
				6.90	<.01
ZZ*		10	.069		

* Male and female combined.

It will be noted from the above table that variance ratio for the male is smaller than that of the female and fails to reach the 5% significance level. But when males and females

are treated together on the basis of their zygosity the variance ratio is found to be significant both at 5% and 1% level which is suggestive of the presence of a strong genetic component of variability for the incidence of the medullary character in the hair shaft.

Heritability of the medullary structure has been estimated by using Holzinger's formula (1937) modified by Neel and Schull (1954), Clark (1956) and Vogel (1961). It has been seen from the above estimate that among the male twins 71%, while among the female twins 93% of the hereditary factors are responsible for the incidence of the medullary structures. The sexual variation in the hereditary estimate might be due to interplay of certain non-genetical factors which is difficult to explain unless further work is done in this line. When all the twins irrespective of their sexes are classified according to their zygosity and considered for the heritability estimate, 85% of the hereditary component of variability has been found to be responsible for the incidence of medullation.

Further work with much more data is, however, necessary to find out the validity of the above-mentioned contention since Kempthorne *et al.* (1961), have cast serious doubts on the meaning and reliability of heritability estimates calculated from twin data by Holzinger's formula.

BIBLIOGRAPHY

Banerjee, A. R. 1957 : Further histological studies on Negrito hair : The Onge of the Andaman Islands. *Man in India*, 37 : 249–256.

———— 1959 : Kadar hair, in A physical survey of the Kadar of Kerala. *Mem. No. 6, Dept. of Anthrop. Govt. India*, 37–49.

———— 1963 : Variation in the medullary structure of human head hair. *Proc. Nat. Inst. Scien. India.*, 29B : 306–316.

———— 1965 : On variation of human head hair : Hair form and medullation. *Z. Morph. Anthrop.*, 57 : 66–69.

Browne, P. A. 1853 : Trichologia mammalium or a treatise on the properties and uses of hair and wool etc. *Phila. J. H. Jones.*

Clark, P. J. 1956 : The heritability of certain anthropometric characters as ascertained from measurements of twins. *Am. J. Human Genet.* 8 : 49–54.

Duggins, O. H. and Trotter, Mildred 1950 : Age changes in head hair from birth to maturity. II. Medullation in hair of children. *Am. J. Phys. Anthrop.* ns. 8 : 399–415.

Hausman, L. A. 1924 : Further studies of the relationships of the structural characters of mammalian hair. *Am. Nat.*, 58 : 544–557.

——— 1925 : The relationship of microscopical structural characters of human head hair. *Am. J. Phys. Anthrop.*, 8 : 173–177.

——— 1930 : Recent studies of hair structure relationships. *Scien. Month.* 30. (*Cit.* Duggins and Trotter 1950).

——— 1934 : Histological variabilities of human hair. *Am. J. Phys. Anthrop.*, 415–429.

Kempthorne, O. and Osborne, R. H. 1961 : The interpretation of twin data. *Am. J. Human Genet.*, 13 : 320–339.

Keneberg, Madeline 1935 : Improved technique for hair examination. *Am. J. Phys. Anthrop.* 20 : 51–68.

Kirk, P. L. 1940 : Human hair studies. I. General consideration of hair individualization and its forensic importance. *J. Crim. Law and Crimin.* 31 : (*Cit.* Trotter and Duggins 1950).

Neel, J. V. and Schull, W. J. 1954 : *Human heredity.* Chicago.

Newman, H. H. Freeman, F. N. and Holzinger, K. J. 1937 : *Twins : A study of heredity and environment.* Chicago.

Osterlene, O. 1874 : *Das menschliche Haar und seine gerichtsartsliche Bedeutung.* Tubingen.

Osborne, R. H. Horowitz, S. L. and De George, F. V. 1958 : Genetic variation in tooth dimensions : A study of the permanent teeth. *Am. J. Human Genet.* 10 : 350–356.

Osborne, R. H. 1962 : *Application of twin studies to dental research in genetics and dental health.* London.

Pinkus, F. 1927 : Dienormale Anatomie der Haut : Handbuch der Haut und Geschlechtskrankenheiten. I. (*Cit.* Duggins and Trotter 1950).

Pruner-Bey 1883 : De la Chevelure comme characteristique des races humaines, d' apre's de recherches microscopiques. *Mem. Soc. Anthrop.* Paris II (*Cit.* Hausman 1934).

Schaeuble, J. 1959 : Beobachtungen an Bushmanhaaren. *6 Tag. D. Ges. Anthrop.*, 85–86, Gottingen.

Seibert, H. C. and Steggerda, M. 1942 : The size and shape of human head hair along the shaft. *Jr. Heredity*, 33 : 302–304.

Steggerda, M. 1940 : Cross-section of human hair from four racial groups. *Jr. Heredity*. 31 : 475.

Trotter, Mildred and Duggins, O. H. 1950 : Age changes in human head hair from birth to maturity. III, Cuticular scale counts of hair of children. *Am. Jr. Phys. Anthrop.* ns. 8 : 467–484.

——————— 1948 : Age changes in head hair from birth to maturity. I. Index and size of hair of children. *Am. Jr. Phys. Anthrop.* ns. 6 : 489–506.

Vernall, D. G. 1961 : A study of the size and shape of cross-section of hair from four races of man. *Am. J. Phys. Anthrop.*, 19 : 345–350.

Verschuer, O. von 1939 : Twin researches from the time of Francis Galton to the present day. *Proc. Roy. Soc. Lond.* B : 128 : 62–81.

Vogel, F. 1961 : *Lehrbuch der Allgemeinen Humangenetik*. Berlin.

Wynkoop, Elizabeth M. 1929 : A study of age correlations of the cuticular scales, medullas and hair shaft diameters of human head hair. *Am. J. Phys. Anthrop.* 13 : 177–188.

ANTHROPOMETRIC CHARACTERS OF FOOT OF A RURAL AND AN URBAN POPULATION OF ASSAM

BONOSHREE DEVI

BHUBAN M. DAS

(*Received on 10 May 1968*)

Abstract : The present article deals with the differences between a rural and an urban population of Assam in respect of some anthropometric characters of the foot. The present data have been compared with the data reported from Bengal.

Introduction

THE difference between the urban and rural populations of Bengal in respect of some morphological characters of foot was pointed out by Sarkar (1958). The present study, in some respects, may be considered as a follow-up of his work. Anthropometric characters of a rural and an urban population of Assam have been studied with a view to finding out if there are differences between the two populations. The results obtained in the present study have been compared with those reported by Sarkar.

The following anthropometric characters have been dealt with : foot length, foot breadth, foot height, foot girth and hallux divergence angle. The foot index has also been calculated. Foot height and foot girth were measured directly on the subjects, while length, breadth and angle were measured on the tracings of the foot. In taking the contour of the foot, the method described by Sarkar was adopted. For the purpose of comparison the *t*-test of significance has been applied. The value of 2 has been taken as the standard of significance.

Dr. Bhuban M. Das is Reader in Anthropology, Gauhati University. His personal address is Chandra Kumar Road, Panbazar, Gauhati, Assam. Mrs. Bonoshree Devi is a research worker under him. Her personal address is C/o Dr. Prabhat Mahanta, Tokobari, Gauhati.

The urban data were collected in Gauhati, mostly from among those University students who come from urban areas. The rural sample was collected from two villages, namely, Sensoa and Khutikotia in Nowgong district. The data were collected at random. Only adult persons were studied. The subjects were mostly unrelated persons. The subjects included in the study come from four Assamese castes, namely, Brahmin, Kalita, Keot and Koch. The sample size was 100 for each sex of the two populations. Thus the total number was 400 including 200 urban (100 male and 100 female) and 200 rural (100 male and 100 female) individuals. The urban individuals habitually used footwear, while the rural people did not use footwear.

The Data

The statistical constants of the anthropometric characters have been given in Table 1. Table 2 shows the values of *t*.

Male : It appears from Table 1 that the foot of the rural male is longer and broader than that of the urban male. The length of foot of urban male varies between 21.6 cm. and 26.5 cm., with the mean of 24.56 ± .051 cm. while that of the rural male varies between 22.2 cm. and 27.7 cm. with the mean 25.17 ± .063 cm. The difference (0.61 cm.) is statistically significant, the value of *t* being 7.6. In respect of foot breadth also the two populations differ significantly as the value of *t* is 4.2. The mean foot breadth of the urban male is 9.29 ± .05 cm. with the range varying between 6.8 cm. and 10.3 cm., while that of the rural male is 10.36 ± .05 cm., the range varying between 8.7 cm. and 11.8 cm.

TABLE 1

Statistical Constants of the Measurements.

	No. of individuals	Male (Urban) Range	Male (Urban) Mean ± S.E.	Male (Urban) S.D. ± S.E.	Male (Rural) Range	Male (Rural) Mean ± S.E.	Male (Rural) S.D. ± S.E.
Foot length (cm.)	100	21.6 – 26.5	24.56 ± .051	.522 ± .08	22.2 – 27.7	25.17 ± .063	.063 ± .04
Foot breadth (cm.)	100	6.8 – 10.3	9.29 ± . 05	.53 ± .05	8.7 – 11.8	10.36 ± . 05	.59 ± .04
Foot index	100	33.0 – 45.9	38 72 ± .146	1.48 ± .12	35.9 – 44.9	40.37 ± . 18	1.83 ± .12
Foot height (cm.)	100	6.0 – 8.1	7.12 ± .048	.48 ± .02	6.4 – 9.0	7.33 ± .078	.78 ± .05
Foot girth (cm.)	100	21.0 – 25.1	23.23 ± .071	.71 ± .05	21.0 – 27.1	23.21 ± .074	.74 ± .05
Hallux Divergence angle	100	5° – 8°	6.54° ± .72	.72° ± .05	4° – 10°	7.55° ± . 12	1.29 ± .09
		Female (Urban)			**Female (Rural)**		
Foot length (cm.)	100	21.0 – 25.1	23.20 ± .085	.85 ± .06	20.5 – 25.5	22.87 ± .088	.88 ± .06
Foot breadth (cm.)	100	7.6 – 9.8	8.73 ± .049	.49 ± .03	7.7 – 10.2	9.07 ± .046	.42 ± .03
Foot index	100	34.0 – 42.9	38.62 ± . 22	2.22 ± .15	35.0 – 43.9	39.15 ± . 22	2.26 ± .16
Foot height (cm.)	100	5.6 – 8.0	6.73 ± . 06	.605 ± .04	5.5 – 7.6	6.38 ± . 04	.47 ± .03
Foot girth (cm.)	100	19.8 – 24.0	21.53 ± . 08	.89 ± .07	18.3 – 23.8	21.24 ± . 08	.803 ± .05
Hallux Divergence Angle	100	4° – 10°	6.29° ± . 10	1.11° ± .07	4° – 8°	6.16° ± . 11	1.16° ± .08

TABLE 2

Difference of Means : Values of t-test.

	Foot length		Foot breadth		Foot index		Foot girth		Foot height	
	Diff.	t	Diff.	t	Diff.	t	Diff.	t	Diff.	t
Male : Urban-Rural	0.61	7.6	1.07	4.2	1.65	2.3	0.02	2.2	0.21	2.3
Female : Urban-Rural	0.33	3.0	0.34	6.8	0.53	2.4	0.29	2.6	0.35	4.8

The mean length-breadth index of foot is 38.72 ± .146 for the urban male and 40.37 ± .18 for the rural male. The difference (1.65) between the two is significant as is revealed by the value of t (2.3).

In respect of height also the two populations, namely, the rural and the urban, differ from one another, the value of t being 2.3. The mean value of the rural male (7.33 ± .078 cm.) is higher than that of the urban male (7.12 ± .048 cm.).

The two populations, however, agree in respect of girth of foot. The mean foot girth of the urban male is 23.23 ± .071 cm , with the range varying between 21.0 cm. and 25.1 cm., while that of the rural male is 23.21 ± .074 cm., the range of variation being from 21.0 cm. to 27.1 cm. The difference .02 cm. is not statistically significant.

The mean foot angle is 6.54° ± .72 and 7.55° ± .12 for the urban male and rural male respectively.

Thus it appears that the foot of the urban male differs from that of the rural male in respect of (a) foot length, (b) foot breadth, (c) foot index and (d) foot height. The rural male has in general larger foot than the urban male.

Female : The urban female has longer and narrower foot than the rural female. The height of foot is less in the former than in the latter.

The foot of urban female in average is 23.20 ± .085 cm. in length and it varies between 21.0 cm. and 25.1 cm., while that of the rural female is 22.87 ± .088 cm., the range varying between 20.5 cm. and 25.5 cm. The difference of 0.33 is statistically significant ($t = 3.0$).

The mean breadth of foot is 8.73 ± .049 cm. in the urban female and 9.07 ± .046 cm. in the rural female. In the former the breadth varies between 7.6 cm. and 9.8 cm. and in the latter between 7.7 cm. and 10.2 cm. The difference (0.34) is statistically significant, the value of t being 6.8.

The mean length-breadth index of foot is 38.62 ± .22 and 39.15 ± .22 in the urban and the rural female respectively. In the former it varies between 34.0 and 42.9, while in the latter between 35.0 and 43.9. The value of t (2.4) suggests statistically significant difference.

TABLE 3

Comparison of 'Mean'.

	No. of individuals	Foot length Mean ± S. E. (in cm.)	Foot breadth Mean ± S. E. (in cm.)	Foot index Mean ± S. E.	Hallux Divergence Angle Mean ± S. E.	Author
Assam Male Urban	100	24.56 ± .05	9.29 ± .05	38.73 ± .146	6.54° ± .72	Present study
Assam Male Rural	100	25.17 ± .063	10.36 ± .05	40.37 ± .18	7.55° ± .12	do.
Bengal Male Urban	120	25.33 ± .073	9.85 ± .03	39.73 ± .20	6.48° ± .130	Sarkar
Bengal Male Rural	65	24.62 ± .101	9.47 ± .05	39.00 ± .11	6.42 ± .20	do.
Assam Female Urban	100	23.20 ± .085	8.73 ± .049	38.62 ± .22	6.29° ± .10	Present study
Assam Female Rural	100	22.87 ± .088	9.07 ± .046	39.15 ± .22	6.16° ± .11	do.
Bengal Female Urban	50	22.64 ± .108	8.71 ± .066	38.57 ± .23	6.70° ± .25	Sarkar
Bengal Female Rural	26	22.88 ± .12	8.66 ± .056	37.89 ± .32	5.60° ± .24	do.

The mean height of foot of the urban female (6.73 ± .06 cm.) is greater than that of the rural female (6.38 ± .04 cm.) The difference (0.35) between the two is statistically significant ($t = 4.8$). The height varies between 5.6 cm. and 8.0 cm. and between 5.5 cm. and 7.6 cm. in the urban and rural female respectively.

The difference (0.13°) between the angle of the urban female (6.29°) and that of the rural female (6.16°) does not appear to be significant.

The mean girth of foot is 21.53 ± .08 cm. and 21.24 ± .08 cm., in the urban and the rural female respectively. The difference of 0.29 cm. is significant, the value of t being 2.6.

Thus it appears that, as in the case of males, the females of the two populations, namely, rural and urban, also differ in respect of (a) foot length, (b) foot breadth, (c) foot index and (d) foot height.

Discussion

The present data have been compared with the Bengal data in Table 3. It appears that, in respect of the anthropometric characters there are rural urban variations. The present study reveals that in general the rural males have longer and broader feet than the urban males. But the Bengal urban males have feet of bigger size than the rural males. The urban females of the Assam sample have longer and narrower feet than the rural females. But in Bengal the rural females show a slightly greater length and lesser breadth than do the urban ; though the differences are not significant.

Summary

The foot of an urban sample of Assam has been compared with that of a rural sample in respect of some anthropometric characters, namely, length, breadth, girth, height, index and hallux divergence angle. The study reveals rural-urban

variation in respect these characters. The rural males have longer and broader feet than the urban males. The height and angle are also greater. The index is also higher. In respect of girth, however, the two samples agree. On the other hand the rural females have shorter and broader feet than the urban females. The height and girth are greater in the urban than in the rural samples.

The results obtained in the present study have been compared with that reported from Bengal by Sarkar.

REFERENCE

Sarkar, S. S. 1958 : Morphological characters of the human foot. *Proc. Nat. Ins. Sc.* Vol. 24, B, No. 4, pp. 209-228.

ANTHROPOMETRY OF THE KAIBARTA OF ASSAM

BHUBAN M. DAS

MADHU SUDAN DAS

(*Received on 24 January 1968*)

Abstract. Anthropometric measurements of 100 adult males and 77 adult females of the Kaibarta, a caste group of Assam, were collected from different parts of the district of Kamrup. The data have been analysed and each character has been described separately, showing the sex differences.

Introduction

THE Kaibarta form a boating and fishing community in Assam. They are scattered throughout the plains districts of Assam. But their main concentration is found in the districts of Kamrup and Nowgong. In recent years, some Kaibarta have taken to agriculture and industries. They are Hindu.

As regard the previous study on the physical characters of the Kaibarta, our knowledge is very much limited. Dutta (1938) first attempted to make a comparative study of the anthropometric characters of the castes of Assam. In that connexion he took a few important measurements on one Kaibarta male.

The present anthropometric investigation was carried out in the months of October and November 1966. The data were collected by the second author from five different places in Kamrup district, Assam, viz., Soalkuchi, an industrial village,

The first author is Reader in Anthropology at the Gauhati University. His personal address is Chandra Kumar Road, Panbazar, Gauhati – 1, Assam.

The second author is a Research Scholar working with him. His personal address is Janarpar, P. O. Soalkuchi, District Kamrup, Assam.

20 miles north-west of Gauhati ; Khidirpukhuri, 29 miles west of Gauhati ; Rajapukhuri, 3 miles east from the above site ; Padumbari, a small locality situated at a distance of about 7 miles south-west of Gauhati, and Malaibari, near Kamrup-Khetri railway station.

The number of individuals measured is 100 adult males and 77 adult females. The mean value of age is 36.65 ± 3.40 years in case of males ond 34.50 ± 1.11 years in case of females.

The following measurements were taken : stature, sitting height, head length, head height, head breadth, minimum frontal diameter, bigonial breadth, bizygomatic breadth, nasal height, nasal breadth, upper facial height and total facial height. The following indices have been calculated : cephalic, length height, breadth height, upper facial, total facial and nasal.

The measurements were taken according to the method prescribed by Wilder. In analysing the measurements and indices Martin's classification have been followed.

Somatometric Characters

TABLE 1

Stature

Class	Range in cm.		Male %	Female %
Pygmy	–	129 9	–	1.3
Very short	130.0	149.9	2	65.0
Short	150.0	159.9	45	33.7
Below medium	160.0	163.9	23	–
Medium	164.0	166.9	17	–
Above medium	167.0	169.9	6	–
Tall	170.0	179.9	7	–

The mean stature of the male is 160.93 ± .64 cm. with the range varying between 146.2 cm. and 174.7 cm. while that of the female is 147.91 ± .61 cm. with the range varying between 126.2 cm. and 159.8 cm. The male members of the

Kaibarta are short statured in the majority (45%). The frequencies of below medium, medium, above medium and tall are 23%, 17%, 6% and 7% respectively.

A pygmy element is found among the females. They are very short (65%) in stature. The frequencies of short and pygmy are 33.7% and 1.3% respectively.

Thus the differences between the members of the two sexes in respect of stature is marked.

TABLE 2

Cephalic index

Class	Range	Male %	Female %
Dolichocephalic	70.0 – 75.9	18	13 0
Mesocephalic	76.0 – 80.9	58	55.8
Brachycephalic	81.0 – 85.9	22	26.0
Hyperbrachycephalic	86.0 –	2	5.2

Both male and female Kaibarta show mesocephaly in the majority (male 58% and female 55 8%). The percentage of brachycephly is 22 in male and 26 in female. Hyperbrachycephalic head occurs in 2% and 5.2% in male and female respectively. Dolichocephalic head is found to be 18% in male and 13% in female. The mean cephalic index of male Kaibarta is 78.84 ± .30 with the range varying between 71.2 and 86.2. The mean head length is 18.49 ± .05 cm. with the range varying between 17.1 cm. and 19.8 cm. and the mean head breadth is 14.60 ± .05 cm. with the range varying between 13.4 cm. and 16.1 cm.

In female, the mean cephalic index is 79.44 ± .39 with the maximum of 88.4 and the mininum of 70.0. The mean head length is 17.20 ± .04 cm. with the range varying between 16.1 cm. and 18.8 cm. ; the mean head breadth is 14.04 cm. ± ,04 cm. with the range varying between 12.2 cm. and 15.1 cm.

Thus in respect of cephalic index the males agree with the females. The difference between the mean of the two sexes is 0.60 only.

TABLE 3

Length height index

Class	Range		Male %	Female %
Chamaecephal	–	57.6	1	1.3
Orthocephal	57.7 –	82.5	12	14.3
Hypsicephal	62 6	–	87	84.4

Both male and female Kaibarta agree with one another in having predominantly hypsicephalic head in almost equal percentages (87% male and 84.4% female). Orthocephaly is found in 12% in male and 14.3% in female. Chamaecephaly occurs almost in equal percentage in both the sexes, it being 1% in male and 1.3% in female. The mean length height index of male is 66.46 ± .33, the maximum being 74.5 and the minimum 57.1, whereas in the case of female it is 66.92 ± .48 with the range varying between 53.6 and 82.7.

The mean head height in case of male is 12.35 ± .04 cm. with the range varying between 10.4 cm. and 14.5 cm. and in case of female it is 12.22 ± .05 with the range varying between 10.1 cm. and 13.3 cm.

TABLE 4

Breadth height index

Class	Range		Male %	Female %
Tapeinocephal	–	78.9	12	15.6
Metriocephal	79.0 –	84.9	36	35.0
Acrocephal	85.0	–	52	49.4

The two sections, male and female, agree with one another in having predominantly acrocephalic head (52% in male and 49.4% in female). Metriocephaly occurs in almost equal percentages (male 36% and female 35%). Tapeincephaly is found in male and female in 12% and 15.6% respectively.

The mean breadth height index of male is 83.12 ± .48 with the range varying between 68.8 and 96.4 and in case of female it is 84.34 ± .51 with the maximum of 93.5 and the minimum of 72.8.

Thus the difference between the two sexes in respect of breadth height index is not much, being 0.46 only.

TABLE 5

Total facial index

Class	Range		Male %	Female %
Hypereuryprosopic	—	78.9	18	31.2
Euryprosopic	79.0	83.9	30	29.9
Mesoprosopic	84.0	87.9	28	20.8
Leptoprosopic	88.0	92.9	19	11.7
Hyperleptoprosopic	93.0	—	5	6.5

Both the sexes possess euryprosopic face in the majority, its percentage is slightly higher in female (hypereuryprosopic 31.2% and euryprosopic 29.9%) than in males (hypereuryprosopic 18% and euryprosopic 30%). Leptoprosopic face occurs in slightly higher percentage in males (leptoprosopic 19% and hyperleptoprosopic 5%) than in females (leptoprosopic 11.7% and hyperleptoprosopic 6.5%). Mesoprosopic face is seen in 28% and 20.8% in male and female respectively.

The mean total facial index of male is 84.45 ± .54, the range varying between 68.6 and 100.0. The mean total facial index is 81.96 ± .69 in the case of female, the range varying between 70.1 and 98.3.

The mean bizygomatic breadth of the male is 13.26 ± .05 cm. with the range varying between 11.5 cm and 15.0 cm. whereas in female it is 12.91 ± .05 with the maximum of 13.5 cm. and the minimum of 11.7 cm.

TABLE 6

Upper facial index

Class	Range	Male %	Female %
Hypereuryene	— 42.9	—	1.3
Euryene	43.0 – 47.9	26	24.6
Mesene	48.0 – 52.9	55	53.3
Leptene	53.0 – 56.9	16	15.6
Hyperleptene	57.0 —	3	5.2

Mesene type of face is found in the highest frequency both in male and in female, the percentages being 55 and 53.3 respectively. Euryene and leptene occur almost in equal percentages in both the sexes (male : euryene 26% and leptene 16% ; and female : euryene 24.6% and leptene 15.6%). Hyper-leptene is is found in 3% in male and 5.2% in female, while hyper-euryene is found only in female (1.3%).

The mean upper facial index of male is 52.70 ± .30 which varies between 43.2 and 61.2. In the case of female it is 50 10 ± .45, the range varying between 39.5 and 63 3. The mean upper facial height of the male is 6.62 ± .04 cm. the range varying between 5.7 cm. and 7.6 cm. whereas the female mean is 6.34 ± .05 cm. with the range varying between 5.3 cm. and 7.7 cm.

Thus the mean value of upper facial index in male is slightly higher than that in female.

TABLE 7

Nasal index

Class	Range	Male %	Female %
Leptorrhine	55.0 – 69.9	26	39
Mesorrhine	70.0 – 84.9	60	52
Platyrrhine	85.0 – 99.0	14	9

Mesorrhine nose is found in the highest frequency both in male and in female, the percentages being 60 and 52 respectively. The frequency of leptorrhine is slightly higher in female (39%) than in male (26%). Platyrrhine is 14% and 9% in male and female respectively.

The mean nasal index of the male is 74.91 ± .78 with the maximum of 97.7 and minimum of 61.4. The mean nasal length is 4.72 ± .09 cm. the range varies between 4.3 cm. and 5 8 cm. The mean nasal breadth is 3.72 ± .09 cm. It varies between 3.0 cm. and 4.6 cm. The mean nasal index of female is 72.33 ± .85 with the maximum of 91.6 and the minimum of 56 5. The mean nasal length is 4.98 ± .03 cm. The maximum and the minimum being 5.5 Cm. and 3.6 cm. respectively. The mean nasal breadth is 3.34 ± .09 cm. the range varying between 2.8 cm. and 4.0 cm.

Thus the nose of female is slightly narrower than that of male. The difference between the mean of the two sexes is 2.58.

Minimum frontal breadth : The mean frontal breadth of male is 10.72 ± .05 cm. the maximum and the minimum being 12.4 cm. and 9 4 cm. respectively. The female mean is 9.30 ± .07 cm. the range varying between 11.3 cm and 9.1 cm,

Bigonial breadth : The mean bigonial breadth in male is 10.55 ± 06 cm. The maximum and minimum being 1 .2 cm. and 9.0 cm. respectively and that of female is 9.89 ± .04 cm. the range varying between 11.5 cm. and 8.6 cm.

Sitting height : The mean sitting height of male is 82.30 ± .31, the maximum and the minimum being 93.0 cm. and 73.5 cm. respectively, while that of female is 74.50 ± .40 cm. with the range varying between 83.7 cm. and 65.3 cm.

The statistical constants of the measurements and indices with their respective standard errors have been given in Tables 8 and 9.

TABLE 8

(*Male 100*)

Measurements in cm.	Range		Mean ± SE	SD ± SE	CV ± SE
Stature	146.2	174.7	160.93 ± .64	6.41 ± .45	3.98 ± .28
Sitting height	73.5	93.0	82.30 ± .31	3.13 ± .22	3.56 ± .25
Head length	17.1	19.8	18.49 ± .05	0.55 ± .03	2 97 ± .21
Head breadth	13.4	16.1	14.60 ± .05	0.51 ± .03	3 49 ± .24
Head height	10.4	14.5	12.35 ± .04	0.49 ± .03	3.96 ± .20
Minimum frontal dia.	9.4	12.2	10.72 ± .05	0.51 ± .03	4.75 ± .33
Bizygomatic breadth	11.5	15.6	13.26 ± .05	0.56 ± .03	4.22 ± .29
Bigonial breadth	9.0	12.2	10.55 ± .06	0.67 ± .04	6 35 ± .44
Upper facial length	5.7	7.6	6.62 + .04	0.40 ± .02	6.04 ± .42
Total facial length	9.2	12.6	11.11 ± .06	0.61 ± .04	5.49 ± .36
Nasal height	4 3	5.8	4.89 ± .03	0.33 ± .02	6.95 ± .48
Nasal breadth	3.0	4.6	3.72 ± .09	0.96 ± .06	25.80 ± 1.82
Indices					
Cephalic	72.2	86.3	78.84 ± .30	3.07 ± .21	3.89 ± .26
Length height	57.1	74.5	66.46 ± .33	3.33 ± .23	5.01 ± .35
Breadth height	68.8	96.4	83.12 ± .48	4.80 ± .33	5.89 ± .41
Total facial	68.6	100.0	85.45 ± .54	5.42 ± .38	6.23 ± .44
Upper facial	43.2	61.2	52.70 ± .32	3.29 ± .23	6.24 ± .44
Nasal	61.4	97.7	74.91 ± .78	7.87 ± .55	10.50 ± .74

SD = Standard deviation

CV = Co-efficient of variation

SE = Standard error

TABLE 9

(Female 77)

Statistical constants of measurements and indices with their respective standard errors

Measurement in cm.	Range		Mean±SE	SD±SE	CV±SE
Stature	126.2	159.8	147.91±.61	5.39±.43	3.64± .29
Sitting height	65.3	83.7	74.50±.40	3.59±.28	7.37± .59
Head length	16.1	18.8	17.20±.04	.38±.03	2.20± .17
Head breadth	12.5	15.1	14.04±.04	.43±.03	3.06± .24
Head height	10.1	13.3	12.22±.05	.50±.04	4.09± .32
Minimum frontal dia.	9.1	11.3	9.38±.07	.62±.05	6.54± .52
Bizygomatic breadth	11.7	13.5	12.91±.05	.52±.04	4 02± .32
Bigonial breadth	8.6	11.5	9.89±.04	.38±.03	3.84± .31
Upper facial length	5.3	7.7	6.34±.05	.51±.04	8.04± .64
Total facial length	8.9	12.4	11.02±.08	.78±.06	7.07± .57
Nasal height	3.6	5.5	4.98±.03	.33±.02	6.62± .53
Nasal breadth	2.8	4.0	3.34±.09	.84±.06	25.14±2.02
Indices					
Cephalic	70.0	88.4	79.44±.39	3.42±.27	4.30± .34
Length height	53.6	82.7	66.92±.48	4.29±.34	6.41± .51
Breadth height	72.8	93.5	94.34±.51	4.50±.35	5.33± .42
Total facial	70.1	98.3	81.96±.69	6.09±.49	7.45± .60
Upper facial	39.5	63.3	50.10±.45	3.98±.32	7.94± .64
Nasal	56.5	91.6	72.33±.85	7.73±.62	10 88± .86

SD=Standard deviation

CV=Co-efficient of variation

SE=Standard error

REFERENCES

Dutta, B. 1938 : Anthropological notes on some Assam castes. *Anthropological Paper No. 5. Jr. Cal. University.*

ANTHROPOMETRY OF THE SAHARAYA OF JHANSI, U. P.

MALAY KUMAR BANERJEE

(*Received on 22 June 1968*)

Abstract : The purpose of this study is to present the anthropometric characteristics of the Saharaya, a Scheduled caste inhabiting Jhansi district in Uttar Pradesh.

Introduction

THE Saharaya are a Scheduled caste occupying the lowest place in the social hierarchy. They are primarily landless labourers but also eke out their livelihood by selling honey. The Saharaya inhabit the south-western part of U. P., mostly in Jhansi. Very few are present in Jalaun and Hamirpur districts. In Jhansi, they are found all over the district. Generally they live in agglomerated hamlets. Their population in U. P. is 11,568 according to the 1961 Census.

The anthropometric data on the Saharaya were collected by the present author from the villages of Jaura, Bamrauli and Mirauna during the months of January and February 1967. No attempt has so far been made to study their physical characteristics.

The Data

Anthropometric data on 50 adult male individuals were collected by the author between the ages of 18 and 52 years. The technique of measurement followed is that of Martin, excepting for the auricular height which was measured with Schultz's parallelometer.

The author is attached to the Anthropological Survey of India, Central India Station, Nagpur. *His home address is 80*, Khurshedbagh, Lucknow (U. P.).

Age distribution

According to 5-year class interval, the distribution of the age of the individuals is as follows :

TABLE 1

Age distribution

Age	Frequency	Percentage
18 – 22	5	10
23 – 27	17	34
28 – 32	8	16
33 – 37	8	16
38 – 42	1	2
43 – 47	1	2
48 – 52	10	20

Table 1 shows that highest frequencies are observed between 18 years and 37 years ; 76% of the population falling within these ages. The remaining 24% belong to the ages between 38 years and 52 years of which the age group of 48-52 years has the incidence of 20%.

Statistical constants

Table 2 presents mean, standard deviation and coefficient of variation with their respective standard errors for the 13 metric characters of Saharaya males.

TABLE 2

Statistical constants of direct measurements with their respective standard errors

Characters (mm.)	Range	Mean ± S.E.	S. D. ± S. E.	C. V. ± S. E.
Stature	1503 – 1736	1624.58 ± 8.07	57.09 ± 5.71	3.51 ± 0.35
Sitting height	748 - 903	830.52 ± 4.62	32.66 ± 3.26	3.93 ± 0.39
Head length	176 – 199	186.98 ± 0.70	4.98 ± 0.50	2.66 ± 0.26
Head breadth	124 – 142	135.08 ± 0.58	4.13 ± 0.41	3.06 ± 0.31
Auricular height	106 – 126	117.64 ± 0.64	4.54 ± 0.45	3.86 ± 0.39
Min. Frontal breadth	89 – 108	98.92 ± 0.61	4.33 ± 0.43	4.38 ± 0.44
Bizygomatic breadth	120 – 142	130.68 ± 0.59	4.17 ± 0.42	3.19 ± 0.32
Bigonial breadth	90 – 115	101.46 ± 0.72	5.06 ± 0.51	4.99 ± 0.50
Upper facial height	60 – 81	68.72 ± 0.66	4.69 ± 0 47	6.82 ± 0.68
Total facial height	101 – 135	114.76 ± 1.05	7.41 ± 0.74	6.45 ± 0.64
Nasal height	41 – 59	48.14 ± 0.51	3.63 ± 0.36	7 54 ± 0.75
Nasal breadth	34 – 42	38.34 ± 0.03	2.31 ± 0.23	6.02 ± 0.60
Hor. Circ. of head	505 – 569	530.10 ± 0.19	13.38 ± 1.34	2.52 ± 0.25

Stature

Among the Saharaya, 'short' stature is found to occur in the highest frequency (38%). Next to it comes 'below medium' (24%) and 'above medium' (18%). 'Medium' and 'tall' occur in equal percentages of 10. The mean value of stature is 1624.58 ± 8.07 mm. with the range varying between 1736 mm. and 1503 mm. this falling in the 'below medium' class. The classification frequencies of stature are given in Table 3.

TABLE 3

Stature

Class	Range in mm.	Number	Percentage
Short	1500 – 1599	19	38
Below medium	1600 – 1639	12	24
Medium	1640 – 1669	5	10
Above medium	1670 – 1699	9	18
Tall	1700 – 1799	5	10

Sitting height

Sitting height falls in the following classes :

TABLE 4

Sitting height

Class	Range in mm.	Number	Percentage
Very low	below 749	1	2
Low	750 – 799	8	16
Below medium	800 – 849	29	58
Medium	850 – 899	11	22
Above medium	900 – 949	1	2

It is apparent from Table 4 that the 'below medium' is the most highly represented class, its frequency being 58% ; the next highest concentration is observed in the 'medium' class (22%). Among the Saharaya, sitting height ranges between 748 mm. and 903 mm. and the mean value is 830.52 ± 4.62 mm., which also falls in the 'below medium' class.

Cephalic index

Dolichocephalic element (66%) predominates among the Saharaya. Next to it comes hyperdolichocephaly (30%). The percentage of mesocephaly is 4%. The details are given in Table 5. The mean cephalic index of the group is 72.27.

TABLE 5

Cephalic index

Class	Range	Number	Percentage
Hyperdolichocephal	below 70.9	15	30
Dolichocephal	71.0 – 75.9	33	66
Mesocephal	76.0 – 80.9	2	4

Nasal index

Though Saharayas are characterized by mesorrhine nose (72%), a high percentage of chamaerrhine (20%) is also met with. Details are given in Table 6. The mean nasal index of the Saharaya under study is 79.99.

TABLE 6

Class	Range	Number	Percentage
Leptorrhine	55.0–69.9	3	6
Mesorrhine	70.0–84.9	36	72
Chamaerrhine	85.0–99.9	10	20
Hyperchamaerrhine	100.0–above	1	2

Upper facial index

Though the mesene type of face occurs predominantly (48%), a high percentage of leptine (42%) is also met with. The detailed frequencies are given in Table 7. The mean upper facial index is 52.62.

TABLE 7

Upper facial index

Class	Range	Number	Percentage
Euryene	43.0–47.9	5	10
Mesene	48.0–52.9	24	48
Leptene	53.0–56.9	14	28
Hyper-leptene	57.0–above	7	14

Total facial index

Though in the majority the face of the Saharaya is long as suggested by the highest frequency of leptoprosopic type (46%), yet the frequency of medium type of face is also high, being present in 30% of the sample. The details are presented in Table 8. The mean total facial index of the Saharaya is 87.87.

TABLE 8

Total facial index

Class	Range	Number	Percentage
Hypereuryprosop	below–78.9	3	6
Euryprosop	79.0–83.9	9	18
Mesoprosop	84.0–87.9	15	30
Leptoprosop	88.0–92.9	14	28
Hyperleptoprosop	93.0–above	9	18

Summary

The Saharaya are short to medium in stature, the mean stature being 1624.58 mm. Their head is dolichocephalic (66%). The nose is mesorrhine (72%). The face of the Saharaya is long as revealed by their upper facial and total facial indices.

The author expresses his gratitude to Dr. D. K. Sen, Director, Anthropological Survey of India, for kindly providing him an opportunity to undertake an anthropometric survey of Uttar Pradesh.

PTC TASTE SENSITIVITY IN SOME ORISSAN CASTES

K. C. TRIPATHY

(*Received on 22 November 1967*)

Abstract : 195 Oriya subjects consisting of 56 Brahmins, 41 Karanas, 49 Khandayats and 49 Other castes have been studied with a view to determining their sensitivity to phenylthiocarbamide. The percentage of tasters among Brahmins is 66.1, Karanas 63.4, Khandayats 81.6 and in the case of Other castes 71.4. The highest taste sensitivity is observed in the case of Khandayats and Other caste groups. Betel-chewing, non-vegetarian diet and smoking have insignificant effect on the taste-threshold distribution and thus do not affect the sensivity to taste PTC.

Material

THE present paper deals with the study of the Brahmins, Karanas, Khandayats and Other castes of Orissa like the Oilmen, Barber, Confectioner etc., concerning their ability to taste PTC (phenylthiocarbamide) in relation to eating, chewing and smoking habits. The taste deficiency was examined among 195 Oriya males. The entire data consists of 56 Brahmins, 41 Karanas, 49 Khandayats and 49 Other castes. The subjects tested were between 10 and 25 years of age. The study was undertaken during the year 1965-66 in three major castes. No selection has been applied in choosing the subjects. Attention was paid to keeping the sampling random.

Method

The sorting method of Harris and Kalmus (1949) and as described by Das (1956) was used to segregate tasters and non-tasters. The PTC solutions (13 concentrations) were prepared

The author is Lecturer in physical anthropology, Utkal University. His personal address is Vani Vihar, Bhubaneswar – 4, Orissa, India.

by the writer. A stock solution containing 0.13% of PTC was made in boiled tap water and then serial dilutions were made to prepare the T. S. N. solution No. 2 to 13. The stock solution was diluted with an equal quantity of boiled tap water to form T. S. N. 13.

After classifying the subject into the taster, non-taster category, his age, caste and drug addiction if any (betel-chewing, tobacco-chewing, smoking, etc.) and dietary habits (vegetarian and non-vegetarian) were also recorded.

TABLE 1

Distribution of taste blindness in some castes of Orissa

Groups	No. observed	Absolute numbers		Percentage	
		Taster	Non-taster	Taste	Non-taster
Brahmin	56	37	19	66.1	33.9
Karana	41	26	15	63.4	36 6
Khandayat	49	40	9	81.6	18.4
Other castes	49	35	14	71.4	28.6
Total	195	138	57	70.8	29.2

The incidence of tasters among the different caste groups of Orissa has been presented in Table 1. Out of 195 Oriyas examined, 138 were tasters and 57 were non-tasters; their percentages being 70.8 and 29.2 respectively.

TABLE 2

PTC taste phenotype and gene-distribution among some castes of Orissa

Groups	Taster	Non-taster	Genotype	
			T	*t*
Oriyas number	138	57	0.4959	0.5041
(No.=195) percentage	70.8	29.2		

Homogeneity Chi^2 among the caste groups=0.882 1 d. f ; $p>0.50$

The phenotype and the gene distributions of the different caste groups of Orissa are combined together and have been presented in the Table 2. The homogeneity value among the different caste groups is found to be highly insignificant (Chi^2 = 9.882, 1 d. f; p>0.50). The phenotype numbers, therefore, were combined together and the gene frequencies T and t estimated for the population were found to be 0.4959 and 0.5041 respectively.

PTC threshold distribution for various types of habits, such as betel and non-betel chewers, smokers and non-smokers, vegetarian and non-vegetarian were all taken together and has been presented in the Table 3. The difference between the averages of Brahmin and Karana comes to 0.868 (standard error 0.181). Now 0.868/0.181 = 4.77, which is significant. These two groups exhibit many significant differences between themselves in the mean thresholds for the tasters. Similarly the average of Brahmin and Khandayat, Karana and Khandayat, Brahmin and Other castes can be compared to measure the inter-group similarities or differences.

TABLE 3

PTC taste threshold distribution in some castes of Orissa

Groups	Taste threshold numbers														
	0	1	2	3	4	5	6	7	8	9	10	11	12	13	Tota
Brahmin	19	1	4	7	6	8	4	3	2	1	1	–	–	–	56
Karana	15	1	2	5	6	2	5	1	1	1	1	1	–	–	41
Khandayat	9	2	4	3	6	12	4	3	2	2	1	1	–	–	49
Other castes	14	3	2	3	6	9	8	2	2	1	1	–	–	–	49
Total	57	7	12	18	24	31	21	9	7	5	4	2	–	–	19

Brahmin average of tasters = 5.840 ± 0.265

Karana average of tasters = 4 942 ± 0.334

Khandayat average of tasters = 5.463 ± 0.037

Other castes average of tasters = 5.543 ± 0.359

TABLE 4

PTC distribution and genotypic frequencies in terms of habits

Habit	No. observed	Absolute numbers Taster	Absolute numbers Non-taster	Percentage Taster	Percentage Non-taster	Genotypes T	Genotypes t
Betel-chewer	102	87	15	44.63	7.65	0.7234	0.2766
Non-betel-chewer	93	79	14	40.53	7.18	0.7321	0.2679
Smoker	43	38	5	19.49	2.56	0.8381	0.1619
Non-smoker	152	141	11	72.31	5.66	0.7621	0.2379
Vegetarian	12	9	3	4.62	1.55	0.8756	0.1244
Non-vegetarian	183	166	17	85.14	8.66	0.7058	0.2942

It has been found that generally the non-smokers have more tasters than the smokers. Thus the phenomenon of smoking has insignificant effect on the 'taste buds', regarding the ability to taste PTC. In other words, the ability to taste phenylthiocarbamide, having once been inherited, is not affected by outside influences.

TABLE 5

Comparison of non-taster frequency among smokers and non-smokers

Investigator	Smokers Non-tasters	no.	Non-smokers Non-tasters	no.	Chi-squars
Falcomer (1947)	60(27.70%)	217	41(23.70%)	173	0.78
Pons (1955)	19(25.30%)	75	24(24.70%)	97	0.01
Freire-Maria (1960)	5(16.70%)	30	4(9.10%)	44	0.96
Seth (1962)	4(2.06%)	38	20(10.31%)	156	0.148
Tripathy (present study)	5(2.56%)	38	11(5.66%)	141	0.361

The findings of the present study have been compared with the data of other workers in India and abroad. The chi-square values as given in Table 5, are statistically speaking, non-significant. Thus it is easy to conclude that different habits hardly affect the sensitivity to taste PTC.

It is observed in Table 6 that all the three castes of Orissa show frequency of taste-blindness which lie within the range of variation of the white populations of Asia and Europe. The Brahmins of Orissa show almost the same frequency of non-tasters and *t* gene in percentage as the Rarhi Brahmins of West Bengal and the Vednagar Nagar Brahmins of Bombay. The Karanas of Orissa almost agree with the Chandrasenya Kayastha of Western India and also of Uttar Pradesh. The Khandyats of Orissa exhibit a low frequency of taste-blindness. The Other caste groups are comparable with the samples of West Bengal and Bombay concerning their PTC taste sensitivity.

Acknowledgement

The author's thanks are due to Utkal University authorities for providing him some financial assistance from Gyana-Vigyan Parishad, to work out his scheme 'Anthropometric status of Orissan castes—a study of physical constitution and racial affinity'. The data of the short paper were collected during the operation of this scheme.

TABLE 6

Phenylthiocarbamide taste distribution in some populations

Population	Author	Number	Non-taster %	*t*—gene %
English	Harris and Kalmus (1936)	441	31.50	56.12
Negros (Africa)	Lee (1934)	915	6.10	24.59
Chinese (Malay)	Lugg and Whyte (1955)	50	2.00	14.14
Vednagar Nagar Brahmin (Bombay)	Sanghvi and Khanolkar (1949)	199	26.00	51.57
Chandrasenya Kayastha	„	200	46.50	68.19
Punjabi (Punjab)	Sharma (1959)	322	31.98	56.55
Rarhi Brahman (West Bengal, 24-Parganas)	Das (1958)	256	29.30	54.12
Brahmin	Present study	56	33.9	50.82
Karana	„	41	36.6	60.05
Khandayat	„	49	18.4	40.30
Other Castes	„	49	28.6	50.35
Oriyas (Orissa)	„	195	29.2	50.41

REFERENCES

Das, S. R. Kumar, Bhattacharjee, P. N, and Sastry, D. B. 1961 : Blood groups (ABO, M–N and Rh) ABH secretion, sickle-cell, PTC taste and colour blindness in the Mahar of Nagpur. *The Journal of Royal Anth. Institute,* Vol. 91, Part–2 ; 346 : 55.

Das, S. R. 1966 : Application of phenylthiocarbamide taste character in the study of racial variation. *Journal of the Indian Anth. Society.*, Vol. 1, No. 1 ; 63 : 80.

Freire–Mala, A. Freire–Mala, N. Quelco–Salgada, A. 1960 : Genetic analysis is Russian immigrants, PTC sonsitivity, Finger prints, Colour vision, Hand clasping and Arm folding. *Amer. J. Phys. Anthrop.* 18 : 235–240.

Fox, A. L. 1932 : The relationship between chemical constitution of Taste. *Proc. Nat. Acd. Sci. Wash*, 18 : 115–120.

Falconer, D. S. (Fischer, R. A.) 1947 : Sensory threshold for solution of Phonylthocarbamide, *Ann. Eugen*, 13 : 211–222.

Harris, H and Kalmus, H. 1949 : The measurement of taste sensivity of phenylthiourea (PTC). *Ann. Eugen*, 15 : 24.

Lugg, J. W. H. and Whyte, J. M. 1955 : Taste threshould for phenylthiocarbamide of some population groups. The threshould of some civilised ethnic groups living in Malay. *Ann. Human. Genet.* 19 : 290–311.

Lee, B. F. 1934 : A genetic analysis of taste deficiency in the American Negro. *Ohio. J. Sci.* 34 : 347.

Race, R. R. and Sanger, R. 1954 : *Blood groups in Man.*, 2nd Ed., Blackwell scientific publication, Oxford.

Sanghvi, L. D. and Khanolkar V. R. 1949–50 : Data relating to seven genetical characters in six endogamous groups in Bombay. *Ann. Eugen*, 15 : 52–76.

Sharma, J. C. 1961 : Blood and PTC taste study in Punjabis and the effect of age and certain eating habits on taste threshold. *Anthropologist*, 6 (1 and 2) : 40–46.

Seth, P. K. 1962 : PTC taste threshold distributions among the betel chewers, non-vegetarianism and smokers, *Eastern. Anth.* Vol. XV, No. 3 ; 36–49.

Synder, L. H. 1932 : The inheritance of taste deficiency in Man *Ohio. J. Sci.* 32 ; 436 : 440.

Strandskev, H. H. 1941 : The distribution of Human genes, *Scientific Monthly* 52 : 203–207.

Tripathy, K. C. 1966 : Taste, mid-digital hair and occipital hair whorls of Khonds. *Adibasi*, Vol. VII, No. 1 ; 29–36.

HYPERTRICHOSIS OF THE EAR

K. C. MALHOTRA

(*Received on 1 October 1967*)

Abstract : Various terminologies and methods used to record the presence of long hair on the human male ear have been examined. In preference to earlier nomenclature, the term 'Hypertrichosis of the ear' has been suggested. A tentative classification based on the morphological criteria of different phenotypic manifestations of the trait has been put forward. Thus four basic and thirteen sub-types have been recognized. It is proposed that all men with one or more halr on any part of the ear (at least one) should be classified as affected.

Introduction

THE last decade has witnessed numerous studies, both by human geneticists and physical anthropologists, on the presence of long hair on the human male ears. Attempts have also been made to use this trait as a population marker. In describing this trait, however, various authors have used different terminologies. To us it appears desirable to devise an appropriate nomenclature not only to include the different phenotypic manifestations of this trait, but also to give adequate importance to each of the variations. It is imperative that the trait should be recorded in an exact manner and that the terminology used should not only be clear but also have an anatomical or morphological basis.

The purpose of the present paper is to examine the various terminologies used and the methods suggested for recording this trait in previous studies. An attempt has also been made to offer a tentative classification in order to minimize the subjective judgement which is often involved in descriptive traits.

Dr. K. C. Malhotra is Lecturer in the Department of Anthropology, Deccan College, Poona-6.

Review of the Literature

It was in 1898, that for the first time Cainer described long hairy growth on the ear of two Italian brothers. Soon after that Tommasi (1907a, b) published a pedigree of this trait. Since both these authors published their articles in language unknown to the present writer, it is not possible for him to deduce what nomenclature was used by Cainer and Tommasi to describe this trait. Barring these two articles, about twenty research papers are now available on the subject under consideration. Eight different terminologies have been used to describe these trait. These have been summarized in Table 1. As is noticed in categories Nos. 2, 3, 4, 5 and 6, most of the authors have emphasized the helix, pinna or rim part of the ear. It should be noted here that although these authors have apparently focussed attention on the helix of the ear, in actual practice they have also observed the trait in other part of the ear (see, in particular, Gates *et al.* 1962a ; Dronamraju 1960, 1963a, b ; Dronamraju and Haldane 1962 ; Chattopadhyay 1962 ; Stern *et al.* 1964). It is not always clear as to which region a particular author wants to refer to under the heading hairy pinna or hairy ear-rims etc. Equally vague is the term hairy ears. Because under this term one would also record the 'long lanugo' (primary hairs) which are retained sometimes even in adulthood.

In order to avoid confusion it may be suggested that the term 'Hypertrichosis of the ear' may be used in future studies. This would have two distinct advantages over the earlier nomenclature. Firstly, under this heading, the presence of long hairs on any part of the ear, e.g. meatus, lobe and helix would be covered and, secondly, it would make provision for not including the lanugo.

Gates *et al.* (1962a) made a suggestion to make a scale of degree of hypertrichosis having a morphological basis emphasizing the location of hairs. They devised six 'stages'. Each stage includes some regions of the ear as also the quantity of the hair present. Stage 1 is described as 'The Italian condition with long, stiff hairs and hairs on the back

and front as well as the rim of the ear' (p. 364). This classification has made the recording more complex and I do not think it will serve any useful purpose. For (i) Gates *et al.* have grouped more than one region in one stage ; (ii) certain parts, namely, meatus of the ear have not at all been included in any one of the 6 stages ; (iii) two separate variables, namely, location and amount of hair have been grouped together ; (iv) the stages do not always differentiate whether a particular part is affected on its dorsal or ventral or both the sides, and (v) there is an amount of rigidity in the classification and a score of combinations cannot be grouped under any of the stages. For instance, if only the lobe is affected, there is no provision for its inclusion in Gates *et al.*'s scheme.

Mention may also be made of a paper by Chattopadhyay (1966b). He uses three terms, namely, 'hairy ear rims', 'tragus hair' and 'hairy ear lobe'. Though this scheme is very useful and has advantages over Gate's classification, it too does not take into account all the phenotypic manifestation of the trait.

Suggested Terminology and Classification

A workable and comprehensive terminology and classification should preferably be based on morphological features. There are two separate variables involved in this trait : (1) the ear and (2) long hairs (not lanugo). The external ear consists of four distinct and easily discernible parts – the external auditory meatus, the tragus, the lobule and the helix. Theoretically, the four different parts of the ear may be affected singularly or in any combination. It may be mentioned here that all these four parts have been found to be affected singularly and in various combinations (see Sarkar *et al.* 1961 ; Gates *et al.* 1962a ; Chattopadhyay 1966 etc.) The presence of hairs on these four regions thus could be referred, after their adjectives, as meatal hypertrichosis, tragus hypertrichosis, lobular hypertrichosis and helical hypertrichosis. (Figure 1.) When more than one region is affected the derived adjectives could be synthesized

by a dash. For example, if meatus and lobe are affected the term meatal-lobular hypertrichosis could be used. For the sake of uniformity it may be suggested that in case more than one region are affected simultaneously they should be recorded in the clock-wise direction, beginning with meatus, tragus, lobe and helix. If we thus recognize four regions then theoretically 10 different phenotypes (4 singularly and 6 combinations) are possible.

It has also been observed that sometimes the helix and lobe may be affected on either dorsal or ventral or on both the sides. This variation could easily be specified without much difficulty by putting the letter d (for dorsal) and v (ventral) as superscripts. For example, if the helix is only affected on its dorsal side, it could be written as helical hypertrichosis^{d}. It has also been noted that the helix may not be affected in its entirety (Slatis and Apelbaum 1963 ; Sarkar *et al.* 1961, Figure 2 and 3). Sometimes the upper portion of the helix is involved ; in other cases the middle or lower portions may be affected. It would be desirable to record even these variations. The helix could easily be divided into different parts. The top or horizontal part of the helix is the upper, and the rest of the helix, which is vertical, could be divided into two equal halves, the upper half being the middle and the lower half being the lower helix (Figure 2). The letters U, M and L could be written, representing upper, middle and lower parts respectively. For example, if only the middle part of the helix is affected, it should be written as helical hypertrichosis (M). If we recognize the basic four regions plus sub-regions of lobe and helix then 17 different phenotypic patterns are theoretically possible. Assuming that each pattern is an independent one, than 180 types (17 singularly and 153 in combinations) are possible. It may, however, be mentioned that in practice one may not encounter this large number of different phenotypes. The nomenclature suggested is listed in Table 2.

On the Methodological Aspect

The other part which needs standardization is the classification of individuals into affected and unaffected categories,

Different criteria have been used to designate a person as affected or otherwise. Stern *et al.* (1964) included all men with one or more hairs on at least one pinna under the affected category. On the other hand, Slatis and Apelbaum (1963) decided that a man should be classified as affected if he has at least several hairs on the top or side of the ear. Both these criteria are inadequate and confusing. For instance, Stern *et al.* do not insist on the number or amount of hair but emphasize location, particularly the pinna. Accordingly if a person has hairs on tragus or meatus he should be grouped under the affected category. Slatis and Apelbaum emphasize both amount of hair and location. The condition of 'several hairs' laid down by these authors introduces a subjective judgement in classification. For instance, if a person has three long hairs, someone may classify him as affected whereas another may include him under the unaffected category. The other condition of location 'top or side of the ear' is open to the same objection as has been pointed out for Stern *et al.*

It may be suggested that location and amount of hair should be considered separately and that all men with one or more hairs on any part of at least one ear should be classified as affected. For recognizing basic and sub-types the same criterion should be followed.

Both ears of each individual should be examined in the way suggested by Stern *et al.* (1964). The trait should be recorded by placing a white card behind the ear and an inspection made by means of a reading glass. On the proforma used, the dorsal and ventral aspects of both the ears should be drawn and the phenotypic pattern recorded on that. This will be very useful for classificatory purposes and would also provide a permanent record.

Hair quantity : The quantity of hair varies considerably from a single hair to heavy bushiness. The recording of this feature would give a great deal of knowledge of degree of penetrance of this trait. Sarkar *et al.* (1961) have suggested

a very useful scale for this purpose. They proposed a scale of hairiness based upon its amount as follows : very scanty, scanty, medium, marked, very marked or bushy. This scale should be retained and applied separately for each type of hypertrichosis. This is important because it has been reported that even when the helix shows a marked hypertrichosis, the degree may be scanty or even very scanty for the lobe.

Hair colour : Though not much work has been done on this aspect of hypertrichosis of the ear, it is suggested that the colour of the hairs may also be recorded. The best way of achieving this would be to compare it with some standard chart, as is done in the case of head hair. In the absence of a chart, however, categories such as white, light brown, medium brown, dark brown, black, etc. may be useful.

Hair texture : The texture of hairs on the ears may also vary and it may be recorded as fine, medium and coarse.

REFERENCE

1. Cainer – (Cited from Gates *et al.* 1962).
2. Chattopadhyay, P. K. 1962 : Hairy pinnae of the ear in some Indian populations. *The Anthropologist*, 9 : 17 – 20. (Publication year 1964).
3. ———— 1964 : Hypertrichosis pinnae auris – a Y – linked trait. *Proceedings of the Summer School in Anthropology*, Dalhousie, India.
4. ———— 1966a : Inheritance of hairy pinnae of the ear. *J. Genet.*, 59 : 3, pp. 329 – 334.
5. ———— 1966b : A note on the frequency of hairy ear rims, tragus hair and hairs on the ear lobe in some South Indian populations residing in Delhi. *Acta Genet. Med. Gemell.* *XV*. 3 ; pp. 321 – 325.
6. Dronamraju, K. R. 1960 : Hypertrichosis of the pinnae of the human ear, Y – linked pedigrees. *J. Genet.* 57 : 230 - 244.

7. ———— 1963a : The age of onset of hypertrichosis pinnae auris among the Oriyan males *Science and Culture.* 29 : 162.

8. Dronamraju, K. R. 1963b : A note on the age of onset of hypertrichosis pinnae auris in Orissa, West Bengal and Ceylon. *J. Genet.* 28 : 324 – 327.

9. Dronamraju, K. R. and J. B. S, Haldane. 1962 : Inheritance of hairy pinnae. *Amer. J. Hum. Genet.* 14 : 102 – 103.

10. Gates, R. R. 1957 : Records of Y – inherited hairy ears in India. *Acta Genet. Med. Gemell.* 6 : 103 – 108.

11. ———— 1960 : Y – chromosome inheritance of hairy ears. *Science.* 132 : 145.

12. Gates, R. R. and P. N. Bhaduri 1961 : The inheritance of hairy ear rims. *Mankind Quaterly, Mankind Monograph No. 1.* 38 pp. Edinburgh.

13. Gates, R. R. and M. R. Chakravarti, and D. R. Mukherjee. 1962a : Final pedigrees of Y – chromosome inheritance. *Amer. J. Hum. Genet.* 14 : 363 - 375.

14. Gates, R. R. and F. Vella. 1962b : Hairy pinnae in Malta. *Lancet.* 2 : 357.

15. Sarkar, S. S., A. R. Banerjee, P. Bhattacharjee, & C. Stern. 1961 : A Contribution to the genetics of hypertrichosis of the ear rims. *Amer. J. Hum. Genet.* 13 : 214 – 223.

16. ———— 1962 : Inheritance of hairy pinnae. *Amer. J. Hum. Genet.* 14 : 434 – 435.

17. Slatis, H. M. and A. Apelbaum. 1963 : Hairy pinna of the ear in Israeli populations. *Amer. J. Hum. Genet.* 15 : 74 – 85.

18. Stern, C., W. R. Centerwall, and S. S. Sarkar. 1964 : New data on the problem of Y – linkage of hairy pinnae. *Am. J. Hum. Genet.* 16 : 455 – 71.

19. Tommasi, C. 1907a : Impertrichosi auricolare famigliare. *Arch. Psichiatr. Neuropat. Anthropol. Crim. Med. Leagle.* 28 : 60 - 67. (Cited from Gates *et al.*, 1962a).

20. ———— 1907b : Impertrichosi auricolare famigliare – *Giorn. Psych. Clin. Tech. Manie.* 35 : 1 - 21. (Cited from Chattopadhyay, 1964).

TABLE 1

Nomenclature	Authors
1. Hairy Ears	Gates (1957, 1960) and Gates *et al.* (1962)
2. Hairy Ear Rims	Gates *et al.* (1961), Chattopadhyay (1966b).
3. Hairy Pinnae	Gates and Vella (1962), Chattopadhyay (1962, 1966), Dronamraju and Haldane (1962). Sarkar *et al.* (1962), Slatis and Apelbaum (1963), Stern, Curt *et al.* (1964).
4. Hypertrichosis of the Ear Rims	Sarkar, *et al.* (1961).
5. Hypertrichosis of the Pinnae	Dronamraju (1960).
6. Hypertrichosis of Pinnae auris	Dronamraju (1963a, b), Chattopadhyay (1964).
7. Tragus hair	Chattopadhyay (1966b).
8. Hairy Ear lobe	Chattopadhyay (1966b).

TABLE 2

Parts of the Ear affected by long hairs		Nomenclature suggested
1. **Meatus**		Meatal hypertrichosis
2. **Tragus**		Tragus hypertrichosis
3. **Lobe**	(i) Dorsal	Lobular hypertrichosis^{d}
	(ii) Ventral	Lobular hypertrichosis^{v}
	(iii) Dorsal and Ventral	Lobular hypertrichosis$^{d, v}$
4. **Helix**	(i) Dorsal	Helical hypertrichosis^{d}
	(ii) Ventral	Helical hypertrichosis^{v}
	(iii) Dorsal and Ventral	Helical hypertrichosis$^{d, v}$
(a) *Lower*	(i) Dorsal	Helical hypertrichosis (L)^{d}
	(ii) Ventral	Helical hypertrichosis (L)^{v}
	(iii) Dorsal and Ventral	Helical hypertrichosis (L)$^{d, v}$
(b) *Middle*	(i) Dorsal	Helical hypertrichosis (M)^{d}
	(ii) Ventral	Helical hypertrichosis (M)^{v}
	(iii) Dorsal and Ventral	Helical hypertrichosis (M)$^{d, v}$
(c) *Upper*	(i) Dorsal	Helical hypertrichosis (U)^{d}
	(ii) Ventral	Helical hypertrichosis (U)$_{v}$
	(iii) Dorsal and Ventral	Helical hypertrichosis (U)$^{d, v}$

Key – d = dorsal ; v = ventral ; L = Lower ; M = Middle ; and U = Upper

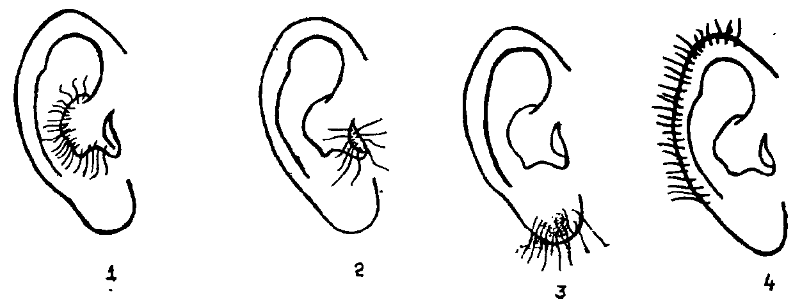

Fig. 1

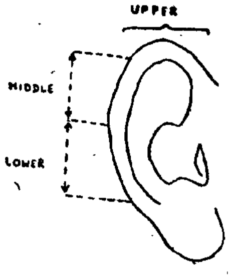

Fig. 2

DERMATOGLYPHIC STUDY AMONG THREE BENGAL CASTES

DHARMADAS SARKAR

(*Received on 27 January 1968*)

Abstract : The purpose of the present paper is to study the dermal ridge-pattern and count-variability among three castes of Nadia district in West Bengal, and to find out the biological relationship among them on the hypothesis that the trait is a criterion of ethnic relationship.

Introduction

THE investigation into the study of human variation with regard to certain physical characters of anthropological significance has revealed a positive result of population differences. And there are some characters which are so genetically ingrained that they, obviously, retain their endowments through generations in the population. Among the polygenetically controlled traits, the dermal configurations are, perhaps, the most effective ones in the study of population variation because of their high variability with less adaptive value, associated with no post-natal modifications.

The purpose of the present paper is to study the dermal ridge pattern and count variability among three caste groups of Nadia district in West Bengal, and to find out the biological relationship among them, on the hypothesis that the trait is a criterion of ethnic relationship.

During April-June, 1963, the finger and palmar impression of 352 unrelated male individuals belonging to the three caste groups were collected. The samples were drawn from various localities in the district.

The author's address is D. Sarkar, Anthropological Survey of India, Indian—Museum, Calcutta—13.

The three caste groups, namely, Brahmin (no. = 117), Kayastha (no. = 114), and Bagdi (no. = 121), occupy different status in the social hierarchy of Hindu society. While the Brahmin and Kayastha are in the higher social order (Brahmin occupying the highest position), the Bagdi are placed in the lower. The present attempt is restricted only to the study of apical dermal configurations.

The prints were obtained according to the standard technique of Cummins and Midlo (1943), using printer's ink. The prints are classified in terms of Galton's three-fold classification of whorl, loop (radial and ulnar) and arch.

Due to the loss of third phalanx in left digit II of one member of the Bagdi caste, the total estimable number of finger prints of the caste group falls short of one print.

Results and Discussion

Papillary pattern

In Table 1 the digit-wise distribution of the papillary pattern frequencies among the three caste groups of Nadia district has been presented.

(a) *Whorl* : From the distribution of whorl, it is evident that the digit IV has recorded the highest occurrence of whorl which is followed by a gradual decreasing trend in the other digits. The frequency of whorl is found to be highest in digit IV, less in I, smaller in II, and finally lowest in III and V. This digit-wise diminutive trend which holds valid for Brahmin and Bagdi groups is, however, found to deviate in Kayastha. In Kayastha the distribution of whorl differs in digit III and V giving rise to an order which follows through digit V to III. This is contrary to what has been observed for Brahmin and Bagdi populations.

(b) *Loop ulnar* : For all the caste groups the ulnar loop distribution is found to occur most in digits V and III, of which the former displays the highest incidence. However, in addition to the above, Kayastha population

shows an excess of ulnar pattern in digit I and II over the others. In terms of occurrence of the ulnar loop in digit it appears, in general, that digit V and III are the most frequent, while digit II and sometimes digit IV are the less.

(c) *Loop radial* : It is found highest in digit II and none in digit V in all the caste groups. The Kayastha, however, show an increase in the radial pattern occurrence in digit II over that of the Brahmin or Bagdi communities.

(d) *Arch* : In this configuration also, digit II of all the caste populations exhibits the highest frequency, while digit IV claims to have the lowest, except for that of the Kayastha which show no involvement at all. The general distribution of arch pattern shows a decreasing order from digit II through digit I, III, V and finally to IV.

In Table 2 the distribution of principal papillary patterns and their indices have been recorded. It will be seen that all the caste groups have a higher percentage of loop over whorl configurations. It is interesting to note that the Brahmin (W = 43%, L = 53%), and the Bagdi (W = 45%, L = 52%) come closer than the Kayastha (W = 40%, L = 57%) in respect of whorl and loop patterns. However, it may be appreciated that no such variation of a considerable magnitude is to be found among the populations in respect of the frequency estimates of whorl and loop configurations which lie within a range of five units only. In arch order also the populations record a more or less uniform size varying between 2.46% and 2.80%.

In order to examine the justifiability of the above observations and to find out the significance in the occurrence of the principal papillary patterns among the caste populations, *Chi*² values for intergroup heterogeneity are calculated. From the values of *Chi*² with two degrees of freedom which are arranged in Table 3, it can be inferred that none of these population samples differ significantly from one another at 5% level of probablity. Thus, in respect of different pattern type variables

in the three populations, no statistical heterogeneity can be detected among them, as the magnitude of the pattern variations is not large enough.

Dankmeijer (1938) demonstrated the existence of striking variations among different population groups with regard to the occurrence of radial loop pattern, and, as such, he recommended that the radial loop pattern estimates may also be considered usefully as a marker in population studies.

In this context, it would be of interest to employ another statistics for testing the significance with regard to the differential distribution of the radial loop between the caste groups to find out the variations if any. The relative values of '*t*' are presented in Table 4. It will be seen from the table that the results of this test reveal no differences but they, in a general way, confirm the information derived from the inter-group variations relating to the principal pattern types.

Indices and Frequencies of Papillary Patterns

Frequencies of the main papillary patterns in individual hands, both hands combined, and the indices derived out of them are given in Table 5.

It appears from Table 5 that pattern intensity (Cummins 1943) and whorl-loop index (Furahatta 1927) of the right hand among all the caste groups are comparatively higher than in the left. Exception is however seen in the case of arch-whorl index (Dankmeijer 1938) where the above trend is found in reverse order in the Kayastha and Bagdi group (i.e., arch-whorl index is increased in the left hand). Similarly, when both the hands (right and left) are considered, indices of the pattern intensity and whorl-loop are seen to be relatively higher among the Bagdis (P. I. I. 14.23, W/L. I. 85.92). A comparative rise in the whorl-loop or in the pattern intensity index may be due to subsequent increase of arch and whorl configurations while the loop plays a less important part in influencing the indices and thus proves to be a delicate indicator (Dankmeijer 1938). Though the three caste groups considerably vary in mean pattern intensity index, the '*t*' test for significance, however, does not yield any statistically significant result as may be seen from Table 6.

Ridge-count

Finger ridge-count being metrical in nature and completely objective, possibly reveals a more complete picture of the print than the study of pattern types. Thus, in Table 7, mean S. D., C. V. of the digit-wise ridge-count and total ridge-count for Brahmin, Kayastha and Bagdi have been worked out.

It will be seen that in Brahmin and Bagdi the ridge-count is highest in digit I and then found to be in a decreasing gradient through digits IV, V, III, and finally lowest in digit II. The finding is in agreement with Holt's results (1957). It is of interest to note that the Kayastha deviate in this respect, expressing the highest ridge-count for digit IV and higher in digit I.

The right hand of Brahmin and Kayastha has a higher count over the left, while in the case of Bagdi the left hand shows a higher value. In any case, the bilateral asymmetry is, however, expressed with respect to ridge-count.

In total ridge-count (R + L), the Brahmin and Bagdi present lowest and highest values respectively, the Kayastha occupying an intermediate position. The same order can also be noticed when the quantitative value of Bonnevie is also accounted for. The various measures of variability of the total ridge-count definitely indicate that the Brahmin are more variable, next in the order are the Bagdi, while least variable are the Kayastha.

Though the total ridge-count values for three groups apparently show inter-group differences, the '*t*' test of significance does not reveal the statistically significant results as may be seen from Table 8.

Summary

The study of finger-pattern and ridge-count among Brahmin, Kayastha, and Bagdi adult male populations of Nadia district, West Bengal, is made. The populations occupy different social statuses in the hierarchy of Hindu society. The position of Brahmin, in this scale, is highest, next come the Kayastha, while the Bagdi occupy the lowest

positionm. In the occurrence of principal pattern types and in pattern intensity index no significant variations have been found among the population groups. On several counts, the Brahmins are found to be more variable than others. The S. D. of ridge-counts of right hand, both hands combined, and also the quantitative value, is higher in Brahmin, so that the C. V. in Brahmins is considerably higher. The Kayastha are least variable. In the total ridge-count, however, none of the samples differs significantly from the rest. Thus, in the finger print pattern, or in the ridge-count, the three populations are not heterogeneous.

The Brahmin and the Bagdi are close in respect of incidences of whorl and loop pattern and also in pattern intensity index, but they differ in total ridge-count. The Brahmin and Kayastha, however, approximate in total ridge-count.

Acknowledgement

The author acknowledges his indebtedness to Dr. D. K. Sen, Director, Anthropological Survey of India, Calcutta, for his kind help in the publication of this paper. The author also expresses his gratitude to Sri P. C. Dutta, of the Anthropological Survey of India, Calcutta, for his valued suggestions in the preparation of this paper.

REFERENCES

Cummins, H. and Midlo, C. 1943 : *Finger Prints, Palms and Soles, An Introduction to Dermatoglyphics*, The Blakiston Co. Philadelphia.

Dankmeijer, J. 1938 : Some anthropological data on finger prints. *Am. Jr. Phy. Antho.* 23, 377–388.

Newman, M. T. 1960 : Populational analysis of finger and palm prints in Highland and Lowland Maya Indians, *Am. Jr. Phys. Anthrop.* n. s. 18, 45–58.

Holt, S. B. 1949 : A quantitative survey of the finger prints of a small sample of the British population. *Ann. Eugen.* 14, 329–38.

Holt, S. B. 1957–58 : Genetics of dermal ridges ; the relation between total ridge count and the variability of counts from finger to finger. *Ann. Hum. Genet.*, 22, 323–39.

Holt, S. B. 1961 : Inheritance of dermal ridge patterns. (*Recent Advances in Human Genetics*, Edited by L. S. Penrose. J. and A. Churchill Ltd. London, 101–119).

Mitra, A. 1953 : *The Tribes and Castes of West Bengal* : Census 1951, West Bengal.

Risley, H. H. 1831 : *Tribes and Castes of Bengal*, Vols. 1 and 2.

TABLE 1

Digit-wise distrtbution of papillary patterns

Caste : Brahmin, Sex – Male, Dt. Nadia

Patterns		Digits (Right and Left combined)					
		I	II	III	IV	V	
		(N=234)	(N=234)	(N=234)	(N=234)	(N=234)	
		%	%	%	%	%	
Whorl		59.83	41.02	32.48	60.68	23.50	
Loop	U	36.75	38.03	63.67	38.46	75.64	
	R	0.43	13.25	1.28	0.43	–	
Arch		2.99	7.69	2.56	0.43	0.85	
Caste : Kayastha, Sex : Male, Dt. Nadia							
		(N=228)	(N=228)	(N=228)	(N=228)	(N=228)	
		%	%	%	%	%	
Whorl		53.51	35.53	24.12	60.96	28.07	
Loop	U	44.74	42.98	72.37	38.60	71.49	
	R	0.44	14.03	0.44	0.44	–	
Arch		1.31	7.46	3.07	–	0.44	
Caste : Bagdi, Sex : Male, Dt. Nadia							
		(N=242)	(N–241)*	(N=242)	(N=242)	(N=242)	Remarks
		%	%	%	%	%	
Whorl		63.22	43.98	26.03	66.94	24.79	* One finger tip in LII is absent
Loop	U	33.47	37.34	70.25	32.23	73.97	
		0.83	12.03	1.65	–	–	
Arch		2.48	6.64	2.07	0.83	1.24	

TABLE 2

Comparative distribution of the principal pattern types and their indices among the caste groups

Caste group	Sex	Pattern Types					Indices			
		Whorl %	Loop % U	Loop % R	Total %	Arch %	P. I. I	Ar/W. I	W/L. I
Brahmin (no.=117)	M	43.50	50.51	3.08	53.59	2.90	14.06	6.67	81.17
Kayastha (no.=114)	M	40.44	54.03	3.07	57.10	2.46	13.80	6.08	70.82
Bagdi (no.=121)	M	44.99	49.46	2.89	52.36	2.65	14.23	5.89	85.92

TABLE 3

Values of Chi-square in the distribution of principal pattern types (Whorl, Loop and Arch) among the Caste groups (Brahmin, Kayastha, Bagdi)

Groups compared	Chi-square value	Remarks
Brahmin and Kayastha	2.876	Not significant
Brahmin and Bagdi	0.627	,, ,,
Kayastha and Bagdi	5.378	,, ,,

TABLE 4

Test of significance in the percentage distribution of radial loops among the caste groups

Groups compared	D. F.	Values of '*t*', when P=0.05	Remarks
Brahmin and Kayastha	2308	0.28	Not significant
Brahmin and Bagdi	2377	1.73	,, ,,
Kayastha and Bagdi	2347	1.64	,, ,,

TABLE 5

Distribution of papillary patterns handwise, both hands (combined), and the indices derived out of them

Caste group	Hand and no. of fingers	Frequency of pattern types in % Whorl	Loop	Arch	Indices P.I.I.	Ar/W.I.	W/L.I.
Brahmin	L. Hand	240	330	15	13.84	6.24	72.72
	(n=585)	41.02	56.41	2.56			
Kayastha	L. Hand	221	334	15	13.61	6.78	66.16
	(n=570)	38.77	58.60	2.63			
Bagdi	L. Hand	271	317	16	14.22	5.91	85.50
	(n=604)	44.87	52.48	2.65			
Brahmin	R. Hand	269	297	19	14.27	7.07	90.57
	(n=585)	45.98	50.77	3.25			
Kayastha	R. Hand	240	317	13	13.98	5.42	75.71
	(n=570)	42.10	55.61	2.28			
Bagdi	R. Hand	273	316	16	14.25	5.85	86.39
	(n=605)	45.12	52.23	2.64			
	Left and Right hand combined	509	627	34	14.06	6.67	81.17
Brahmin	(n=1170)	43.50	53.59	2.90			
Kayastha	,,	461	651	28	13.80	6.08	70.82
	(n=1140)	40.44	57.10	2.46			
Bagdi	,,	544	633	32	14.23	5.89	85.92
	(n=1209)	44.99	52.36	2.65			

TABLE 6

Index of pattern intensity and its significance

Caste groups	Pattern intensity index N	Range of P. I. I.	Mean ± S.E.	Test of significance in Mean P. I. I. S.D. ± S.E.	Groups compared	Values of '*t*'	Remaks
Brahmin	117	8.0–20.0	14.06 ± 0.32	3.52 ± 0.23	Barhmin & Kayastha	0.86	Not significant
Kayastha	114	7.0–20.0	13.69 ± 0.29	3.14 ± 0.21	Brahmin & Bagdi	0 37	,,
Bagdi	121	4.0–20.0	14.22 ± 0.30	3.32 ± 0.21	Kayastha & Bagdi	1.26	,,

TABLE 7

Mean ridge counts and their statistical constants

Caste : Brahmin, Sex : Male, Dt. Nadia

Fingers	n	Mean ± S.E.	S.D. ± S.E.	C.V. ± S.E.
L I	117	16.96 ± 0.53	5.73 ± 0.37	33.79 ± 2.21
L II	117	12.06 ± 0.55	5.96 ± 0.39	49.42 ± 3.23
L III	117	13.36 ± 0.48	5.20 ± 0.34	38.92 ± 2.54
L IV	117	15.94 ± 0.43	4.66 ± 0.30	29.23 ± 1.91
L V	117	14.14 ± 0.43	4.61 ± 0.30	32.60 ± 2.13
L. Hand	117	72.47 ± 1.96	21.22 ± 1.39	29.28 ± 1.91
R I	117	18.69 ± 0.52	5.62 ± 0.37	30.07 ± 1.97
R II	117	11.83 ± 0.60	6.48 ± 0.42	54.78 ± 3.58
R III	117	12.74 ± 0.49	5.31 ± 0.35	41.68 ± 2.72
R IV	117	15.93 ± 0.45	4.86 ± 0.32	30.51 ± 1.99
R V	117	13.56 ± 0.44	4.82 ± 0.31	35.55 ± 2.32
R. Hand	117	72.76 ± 2.02	21.85 ± 1.43	30.03 ± 1.96
L+R. combined :				
I	234	17.83 ± 0.37	5.74 ± 0.26	32.19 ± 1.49
II	234	11.94 ± 0.41	6.23 ± 0.29	52.18 ± 2.41
III	234	13.05 ± 0.34	5.26 ± 0.24	40.31 ± 1.86
IV	234	15.93 ± 0.31	4.73 ± 0.22	29.88 ± 1.38
V	234	13.85 ± 0.31	4.73 ± 0.22	34.15 ± 1.58
Total Ridge counts	117	145.23 ± 3.91	42.27 ± 2.76	29.11 ± 1.90
Q. V.	117	14.52 ± 0.39	4.23 ± 0.28	29.13 ± 1.90

Table : 7 (*Contd.*)

Mean ridge counts and their statistical constants

Caste : Kayastha, Sex : Male, Dt. Nadia

Fingers	n	Mean ± S.E.	S.D. ± S.E.	C.V. ± S.E.
L I	114	16.59 ± 0.52	5.61 ± 0.37	33.82 ± 2.24
L II	114	11.82 ± 0.55	5.93 ± 0.39	50.17 ± 3.32
L III	114	13.74 ± 0.47	4.98 ± 0.33	36.24 ± 2.40
L IV	114	16.61 ± 0.46	4.95 ± 0.33	29.80 ± 1.97
L V	114	14.14 ± 0.40	4.31 ± 0.28	30.48 ± 2.02
L Hand	114	72.90 ± 1.84	19.65 ± 1.30	26.95 ± 1.78
R I	114	18.33 ± 0.53	5.64 ± 0.37	30.77 ± 2.04
R II	114	11.88 ± 0.59	6.27 ± 0 41	52.78 ± 3.50
R III	114	13.26 ± 0.46	4.90 ± 0.32	36.95 ± 2.45
R IV	114	16.57 ± 0.43	4.58 ± 0.30	27.64 ± 1.83
R V	114	14.04 ± 0.44	4.67 ± 0.31	33.26 ± 2.20
R Hand	114	74.09 ± 1.82	19.40 ± 1.28	26 18 ± 1.73
L and R combined :				
I	228	17.46 ± 0.38	5.69 ± 0.27	32.59 ± 1.53
II	228	11.85 ± 0.40	6.10 ± 0.28	51.48 ± 2.41
III	228	13.50 ± 0.33	4.95 ± 0.23	36.67 ± 1.72
IV	228	16.59 ± 0.31	4.76 ± 0.22	30.58 ± 1.43
V	228	14.09 ± 0.30	4.49 ± 0.21	31.87 ± 1.49
Total Ridge counts	114	146.99 ± 3.53	37.72 ± 2.50	25.66 ± 1.70
Q. V.	114	14.70 ± 0.35	3.77 ± 0 25	25.65 ± 1.70

Table 7 (*Contd.*)

Mean ridge counts and their statistical constants

Caste : Bagdi, Sex : Male, Dt. Nadia

Finger	n	Mean ± S.E.	S.D. ± S.E.	C.V. ± S.E.	Remarks
L I	121	17.38±0.50	5.54±0.35	31.88±2.05	* One finger tip in L II is absent
L II*	120*	12.75±0.57	6.23±0.40	48.86±3.15	
L III	121	14.23±0.52	5.75±0.37	40.41±2.60	
L IV	121	16.35±0.48	5.27±0.34	32.23±2.07	
L V	121	14.10±0.45	5.00±0.32	35.46±2.28	
L. Hand	121	74.70±2.05	22.51±1.45	30.13±1.94	
R I	121	18.51±0.55	6.06±0.39	32.74±2.10	
R II	121	12.33±0.50	5.55±0.36	45.01±2.89	
R III	121	13.46±0.45	4.96±0.32	36.85±2.37	
R IV	121	15.64±0.43	4.74±0.30	30.31±1.95	
R V	121	13.93±0.42	4.68±0.30	33.60±2.16	
R. Hand	121	73.88±1.86	20.43±1.31	27.65±1.78	
L and R combined :					
I	242	17.95±0.37	5.83±0.26	32.48±1.48	* One finger tip in L II is absent
II	241*	12.54±0.38	5.90±0.27	47.05±2.14	
III	242	13.85±0.34	5.38±0.24	38.84±1.76	
IV	242	15.99±0.32	5.02±0.23	31.39±1.43	
V	242	14.02±0.31	4.84±0.22	34.52±1.57	
Total Ridge counts ;					
	121	148.59±3.81	41.96±2.70	28.24±1.81	
Q V.	121	14.87±0.38	4.19±0.27	28.18±1.81	

TABLE 8

Test of significance in total ridge counts between the caste groups

Groups compared	Vales of 't'	Remarks
Brahmin and Kayastha	0.33	Not significant
Brahmin and Bagdi	0.62	,, ,,
Kayastha and Bagdi	0.31	,, ,,

FINGER-PRINTS OF THE KORKU

ARABINDA BASU

(Received on 8 February 1968)

Abstract: A study has been made of the finger-prints of the Korku, a Mundari-speaking tribe from Melghat forest region. The frequency of whorls, loops and arches was ascertained, and the findings compared with similar data from other Mundari-speaking tribes of India.

Introduction

THE Korku, a tribe speaking a Mundari language, are found chiefly in the Satpura Hills, Hosangabad and Nimar districts of Madhya Pradesh and in the Melghat Hill forest region in Amravati district of Maharashtra. The 1961 Census records the population of Korku in Melghat Taluq, Amravati district, as 50,279. The tribe is divided into several septs, and marriage within the same sept is not permitted. Karve and Dandekar (1951) consider that linguistically and ethnically the Korku are an isolated and intrusive group in the Maharashtra region.

The object of this paper is to place the finger-print data of the Korku on record, so as to increase the body of comparative racial records available, and to make some comparisons between the results in the Korku and other Mundari-speaking tribes.

Material method

The finger-print data which form the basis of this communication were collected in January, 1964, from Melghat forest region.

The author is Research Associate in the Anthropological Survey of India, South India Station, Mysore. His personal address is 81, 2nd Main Road, Jayalakshmipuram, Mysore—2.

Rolled finger-impressions were taken from 100 male Korku and were analysed according to the method advocated by Cummins and Midlo (1961). With regard to ridge-counting the general principles adopted by Holt (1949) were used in the present study. Altogether 1000 digital impressions were obtained, out of which 15 indistinct and smeared finger-tip patterns had to be rejected. Hence 985 digital impressions of 100 Korku subjects could be utilized for the present study.

Results

Table 1 sets forth the percentile frequencies of pattern types on the individual digits in right and left hand of Korku males. It is observed that whorls are slightly more numerous than loops. True whorls are found to be more frequent on right hand in all the digits. Descending rank order of the whorls in prevalence is IV, I, II, III and V. Like most other population groups the Korku show deficiency of whorls on digits III and V.

The descending sequence of ulnar loops is V, III, I, IV and II. As in most other population groups, radial loops are greatly concentrated in digit II. Excess of loops in the left hand is observed in digits I, III and IV. In digits II and V great correspondence between right and left hand exists for both whorls and loops.

Arches constitute very low percentage of the total occurrence of the three principal pattern types. Arches are totally absent in digits IV and V, but are concentrated mainly in the second digit of both the hands.

So far as the author is aware the only other data on Korku finger based on 31 male individuals are available from the work of Geipel (1961). The present finding on Korku finger-print agrees well with Geipel's observations on the Korku which likewise showed 55.8% whorls, 42.6% loops and 1.6% arches. Chi-square test also reveals that the two Korku samples are clearly homogeneous in their finger-print type frequencies ; the value of chi-square = 166, d.f. = 2.

Ridge-count : Ridge-count provides much more accurate assessment of the print than the analysis of the various pattern types. In Table 2 are given the mean ridge-counts of Korku males for individual digits for right and left hand separately, the sum of the right hand digits (ΣR), the left hand digits (ΣL) and $\Sigma(R+L)$, with standard deviations and coefficient of variation. The standard deviations of these measures appear smaller when compared with Holts (1961) more extensive English series. Descending ranking order of individual digits for mean ridge-counts are 1, 4, 5, 3, 2 for both right and left hands Similar ranking order is also predominant in Holt's English series. Bimanuar difference in mean ridge-counts between fingers shows that excepting for digit I the differences in means in all other digits are not significant. It is apparent that right hand counts are larger in the first, second and fifth digits than the corresponding digits of the left hand. The mean ridge-counts for ΣR, ΣL and $\Sigma(R+L)$ are 65.78, 68.00 and 134.75 respectively.

The Korku and other Mundari-speaking tribes

In Table 3 Korku fiinger-print data together with the indices of Furuhata (100 W/L), Dankmeijer (100 A/W) and Pattern Intensity (P. I. I.) are compared with those found in other Mundari-speaking tribes of India. The Korku, Santal and Munda show slightly higher frequency of whorls than that of loops ; whereas three Mundari-speaking tribes, namely, the Sabara and Juang from Orissa and Asura from Bihar, show more loops than whorls. In Korku, whorls show a medium prevalence, much as in the Munda and Santal. In arch frequency no striking variations are observed among different Mundari-speaking tribes ; they display values ranging from 1.35 to 1.97 per cent. Chi-square test, however, demonstrates highly significant difference, suggesting heterogeneity in the finger-print type frequencies among the Mundari-speaking tribal groups.

It will be apparent from an examination of indicial values that in Pattern Intensity and Dankmeijer's Index, the Korku resemble other Mundari-speaking tribes. It is evident that in

the six Mundari-speaking tribes the Pattern Intensity Index ranging from 13.61 to 15.09 and Dankmeijer's Index ranging from 3.07 to 3.98 which reflects that variations in respect of these two indices, are not appreciably marked Contrary to these two indices, Furuhata Index shows distinct variations in the Mundari-speaking tribes compared. They have an index ranging from 57.26 to 114.45.

In order to get an impression of dermatoglyphic affinities between the Korku and other Mundari-speaking tribes of India, estimates of dermatoglyphic distance between Korku and other Mundari-speaking tribes have been calculated, following the method suggested by Hughes (1967). The results are summarized in Table 4. An examination of the mean square distance suggests that the Korku, in as far as dermatoglyphics is concerned, seem to be much closer to the Munda and the Santal than to other Mundari-speaking tribes. The distance between Korku and Asura appears to be maximum.

Figures for ridge-counts of other Mundari-speaking tribes have not been worked out by the authors concerned, and therefore cannot be utilized for comparative study. Comparative data for mean ridge-counts for other Indian population samples are also very scanty. Table 5 summarizes ten population groups from India on which ridge-counts have been carried out. The Korku total ridge-counts are slightly lower than those for other Indian samples. Results concerning mean total ridge-counts in most of the Indian population groups indicate no distinct variations. In fact, the total ridge-count values for Indian population groups other than the Muslim, lie between the small range of 130 and 150. It is interesting to note that the Muslim community show considerably higher ridge-count values than the other Indian population groups. '*T*'-test reveals that there exists no significant variation between Kashmiri and U. P. Muslims ($t=0.70$) in total ridge-counts.

Summary

The results of finger-print analysis of Korku, a Mundari-speaking tribe from Melghat forest region (Maharashtra) are

briefly summarized here. The frequencies of whorls, loops and arches were ascertained, and these findings compared with similar data from other Mundari-speaking tribes of India. The following frequencies of the pattern types of the male Korkus were observed as 51.23% whorls, 47.02% loops, and 1.74% arches. The mean ridge-counts for $\Sigma R, \Sigma L$ and $\Sigma(R+L)$ are 65.78, 68.00 and 134.75 respectively.

It has been shown that six Mundari-speaking tribes under discussion are heterogeneous in the finger-print type frequencies (Chi-square = 76.090, D. F. = 10, $P<0.001$). When arch frequency is considered, they do not show marked variations and cluster within a small range of 1.35 to 1.97%. The Korku, however, show closer relationship in finger-print patterns to the Munda and Santal than to other Mundari-speaking tribes.

Pattern Intensity Index and Dankmeijer's Index reflect that variations in respect of these two indices are not appreciably marked among the Mundari-speaking tribes. Contrary to these two indices, Furuhata Index shows distinct variation.

The results concerning mean total ridge-counts in most of the Indian population groups compared, other than Muslim communities, indicate no distinct variation.

REFERENCES

Chakravartti, M. R. — Dermatoglyphics of the Santals of West Bengal. *Bulletin, Department of Anthropology, Government of India*, 9, 41–52, 1960.

Cummins, H., and C. Midlo — *Finger Prints, Palms and Soles.* Dover Publ. Inc., New York 1961.

Dutta, P. C. and P. Gupta — Finger print patterns of the Asura tribe of Chotanagpur, India. *Acta Genet.*, Basel. 17, 248–259, 1967.

Galton, F. — *Finger Prints.* London 1892.

Geipel, G. — Das Tastleistensystem der Hände bei Vorderindern. *Z. Morph. Anthrop.* 51, 181–208, 1961.

Grierson, G. A. — *Linguistic Survey of India*, Vol. I, pt. I, 1927.

Gupta, P. and A. Basu, — Dermatoglyphics of the Onge of Little Andaman. *Bull. Anthropological Survey of India* 9, 51–63, 1960.

Gupta, P., A. Basu and D. Sarkar, — Studies on papillary patterns of Lambadi fingers. *Man in India* 41, 222–236, 1961.

Holt, S. B. — A quantitative survey of the finger prints of a small sample of the British population. *Ann. Eugen* 14, 329–338, 1949.

Holt, S. B. — 'Inheritance of dermal ridge patterns' in Penrose, L. S., editor, *Recent Advances in Human Genetics*, London (Churchill), 1961.

Hughes, D. R. — Finger dermatoglyphics from Nuristan, Afghanistan. *Man* 2, 119–125, 1967.

Karve, I. and V. M. Dandekar — Anthropometric measurements of Maharashtra. *Deccan College Monograph Series* : 8. Poona 1951.

Mavelwalla, J. — Quantitative analysis of the finger ridge counts of the Parsi community in India. *Ann. Hum. Genet.* 26, 305–313, 1963.

Mukherjee, D. P. and M. R. Chakravartti — A dermatoglyphic approach to the Mundari ethnic problem. *Z. Morph. Anthrop.* 55, 32–45, 1964.

Sarkar, S. S. and A. R. Banerjee — Finger prints of Orissan aborigines. *Man in India* 37, 182–191, 1957.

Sen, D. K. and P. Gupta — Dermatoglyphics of palm and finger balls of the Kashmiri Muslims. Unpublished.

Singh, R. D. — Digital pattern frequency and size variations in some castes of Uttar Pradesh. *The Eastern Anthropologist* 14, 169–181, 1961.

Srivastava, R. P. — A quantitative analysis of the finger prints of the Tharus of U. P. *Am. J. Phys. Anthrop.* 23, 99–106, 1965.

TABLE 1

Distribution of finger-print patterns in Korku males

Digits	Side	Whorls: True whorls	Whorls: Lateral pocket	Whorls: Central pocket	Whorls: Twin loops	Whorls: Total	Loops: Ulnar	Loops: Radial	Loops: Total	Arches: Tented arches	Arches: Other arches	Arches: Total
I	R	58.00	5.00	2 00	5.00	70.00	29.00	0.00	29.00	0.00	1.00	1.00
	L	34.37	6.25	1.04	16.67	58.83	40.63	0-00	40.63	0.00	1.04	1.04
	R & L	46.18	5.62	1.52	10.83	64.16	34.81	0.00	34.81	0 00	1.02	1.02
II	R	41.84	3.06	3.06	4.08	52.04	32.65	9.18	41.84	0.00	6.12	6.12
	L	38.54	5.21	4.17	5.21	53.13	35.42	5.21	40.63	2.08	4.16	6.24
	R & L	40.19	4.13	3.61	4.64	52.58	34.03	7.19	41.23	1.04	5.14	6.18
III	R	30.30	3.03	5.05	1.01	39.39	58.59	0.00	58.59	0.00	2.02	2.02
	L	27.55	3.06	1.02	5.10	36.73	62.24	0.00	62.24	0.00	1.02	1.02
	R & L	28.92	3.04	3.03	3.05	38.06	60.41	0.00	60.41	0.00	1.52	1.52
IV	R	58.00	1.00	9.00	1.00	69 00	30.00	1.00	31.00	0.00	0.00	0.00
	L	46.00	2.00	7.00	5.00	60.00	39.00	1.00	40.00	0.00	0.00	0.00
	R & L	52.00	1.50	8.00	3.00	64.50	34.50	1.00	35.50	0.00	0.00	0.00
V	R	31.31	1.01	3.03	1.01	36.36	62.63	1.01	63.64	0.00	0.00	0.00
	L	24.24	0.00	5.05	8.08	37.37	61.62	1.01	62.63	0.00	0.00	0.00
	R & L	27.27	0.50	4.04	4.54	36.86	62.12	1.01	63.13	0 00	0.00	0.00
All digits	R	43.89	2.62	4.43	2.42	53.36	42.57	2.24	44.81	0.00	1.83	1.83
	L	34.14	3.30	3.66	8.01	49.11	47.78	1.44	49.23	0.42	1.24	1.66
	R & L	39.01	2.96	4.04	5.21	51.23	45.17	1.84	47.02	0.21	1.53	1.74

TABLE 2

Ridge-count characteristics of the Korku males

Digit	Left (L) $\overline{X}$	Left (L) S. D.	Left (L) C. V.	Right (R) $\overline{X}$	Right (R) S. D.	Right (R) C. V.
I	14.74	4.24	28.76	16.42	4.69	28.56
II	11.48	5.48	47.74	11.57	5.57	48.14
III	12.59	4.80	38.13	12.22	5.00	40.92
IV	14.30	4.69	32.80	14.25	4.12	28.99
V	12.70	3.61	28.43	13.14	3.87	29.45

$\Sigma L\overline{X}=68.00$ S. D. = 14.35 C. V. = 21.10 $\Sigma R\overline{X}=65.78$ S. D. = 22.56 C. V. = 34.30 $\Sigma(R+L)$ $\overline{X}=134.75$ S. D. = 33.75 C.V. = 25.05

TABLE 3

Comparative finger-print data for various Mundari-speaking tıibes (males)

Tribes	Locality	n	W	L	A	100A/W	100W/L	P. I. I.	Source
Korku	Maharashtra	100	51.23	47.02	1.74	3.40	108.95	14.95	Present study
Juang	Orissa	74	42.00	56.64	1.36	3.25	74.15	14.06	Sarkar and Banerjee (1957)
Sabar	Orissa	54	42.42	55.89	1.69	3.98	75.92	14.07	Sarkar and Banerjee (1957)
Asura	Bihar	89	35.92	62.73	1.35	3.76	57.26	13.61	Dutta and Gupta (1967)
Santal	West Bengal	62	52.51	45.88	1.61	3.07	114.45	15.09	Chakravartti (1960)
Munda	Bihar	112	49.65	48.38	1.97	3.97	102.58	14.77	Chakravartti (1960)

Heterogeneity Chi square = 76.090, D. F. = 10, $P. < 0.001$

TABLE 4

Estimates of dermatoglyphic distance (mean square distances) between Korku and other Mundari-speaking tribes

Tribes	Frequency differences			Mean square
	W	L	A	distances
Korku	0.0	0.0	0.0	0.0
Santal	+ 1.3	− 1.1	− 0.1	1.0
Munda	− 1.6	+ 1.4	+ 0.2	1.5
Sabar	− 8.8	+ 8.9	− 0.1	52 2
Juang	− 9.2	+ 9.7	− 0.4	59.6
Asura	− 15.3	+ 15.7	− 0.4	160.2

TABLE 5

Means and standard deviations for total ridge-count in various India male samples

Population group	Author	No.	Mean	S.D.
Korku	Present study	100	134.75	33.47
Lambadi	Gupta, Basu and Sarkar (1961)	51	140.46	–
Onge	Gupta and Basu (1960)	24	135.40	–
Parsi	Mavelwalla (1963)	200	139.81	45.39
U. P. Brahman	Singh (1961)	203	145.30	39.20
Rajput	Singh (1961)	103	146.66	41.60
Ahir	Singh (1961)	114	149.74	36.70
U. P. Muslim	Singh (1961)	100	161.00	31.50
Tharu	Srivastava (1965)	279	130.61	38.47
Kashmiri Muslim	Sen and Gupta (unpublished)	101	157.14	46.52

INDIC ELEMENTS IN TIBETAN CULTURE : POLITY

NIRMAL CHANDRA SINHA

(*Received on 10 December 1968*)

Abstract : While much has been written about Indian influence on the religion and literature of Tibet, little is known about any Indian influence on the political system of traditional Tibet, i.e. government by the monks and priests.

The article traces the sanction for government by the Lamas in (i) the basic concept of early Buddhism ; (ii) the basic concept of Mahayana Buddhism ; and (iii) the Indian ethos which sought harmony between spiritual and temporal needs.

EXCHANGE of ideas like exchange of commodities between two neighbouring countries is a norm of history. Relations between India and Tibet illustrate this truism. Even the Himalayas were not sufficient barriers and this relationship was not a one-way traffic in commerce or culture.

While much is on record regarding India's impact on Tibetan culture, Tibetan influence on Indian culture remains obscure. With the antiquity of Tantra traced back to the Indus Civilization and with Mount Kailas as the focal point in Tantra, regular contacts and exchanges between the mystics on both sides of the Himalayas in pre-Buddhist and even pre-Vedic times are no longer ruled out. Some scholars surmise that Indian Tantra was developed from the pre-Buddhist native religion of Tibet, called Bon.

In the first decade of this century some British scholars had suggested Tibeto-Mongoloid origins for several republican oligarchic tribes of the Himalayas, and that the Buddha (Gautama Siddhartha) was not of Indo-Aryan stock. These suggestions were inspired by political motives and not supported

The author is Director of the Namgyal Institute of Tibetology, Gangtok, Sikkim.

by sound evidence.[1] Now after Independence (1947), Indian scholars adduce adequate ethno-linguistic data in support of an Indic (Sanskrit) synthesis in which the Tibeto-Mongoloid races were partners with the Dravidians and the Aryans. Our National Professor of Humanities, Suniti Kumar Chatterji, with his characteristic objectivity, describes the Buddha as an Indo-Mongoloid.[2]

The Buddha's life and ancestry as well as his ethics and metaphysics constitute an un-Vedic and anti-Vedic tradition. He sprang from a republican tribe which the Buddhist chronicles identified as belonging to the Kshatriya *Varna.* Siddhartha, like his father Suddhodana, married within the prohibited degree, while the forebears of the tribe (Sakya) preserved the purity of their race through matrimony between cousins. The Buddha's denial of the authority of the Vedas, his rejection of the Vedic notion of soul and his hostility to the *Varna* system cannot be explained simply as a Kshatriya challenge to the Brahmana. In the present writer's contention the Buddha symbolized the non-Vedic and non-Aryan element which changed the course of Indian (and Asian) history. The epithet Tathagata, though ethymologically rendered, is not amenable to strict grammatical scrutiny. While the Central Asian documents read by Bagchi, Bailey and Thomas have made the original term more obscure, scholars like Conze and Lamotte suspect the word Tathagata as pre-Aryan.[3] The present writer would have no hesitation in describing the Buddha as of Tibeto-Mongoloid stock, nor will this wound the scholars of India today. The Tibetans—monks, scholars and laymen alike—will however consider such a proposition as blasphemy. In Tibetan belief the Sangs-rgyas (Purified One/Enlightened One = Skt. Buddha) as well as the Dam-chhos (Sacred Doctrine = Skt. Saddharma) originated in Phags-yul (Noble Land = Skt. Aryabhumi). In Tibetan memory, while some costumes and cuisine and social customs and secular institutions might have come to Tibet from the east or the north, all moral and intellectual items came from the south. In fact this total sentiment, rather than the mass of positive data, measures the

Indic impact on the Tibetan mind. Two events from the history of Tibet may be cited to illustrate the historical value of this sentiment.

When the need for a script was felt, the Tibetan authorities looked for a model in India and finalized one in the first half of the seventh century. Difficulties of adapting pictograph ruled out borrowing from China. Sanskrit alphabet (and Brahmi script) was however not the only phonetic medium known in Central Asia ; Aramaic (Kharoshthi) for instance was widely prevalent. Tibetan acquaintance with several phonetic scripts prevailing in Central Asia is well known but the linguistic and morphological grounds which called for a Brahmi script (and a Sanskrit alphabet) are not known. Asked for the precise reasons for an Indic preference, a Tibetan scholar would answer thus : 'As we got the Sacred Doctrine from Aryabhumi we naturally sought a writing medium in Aryabhumi and there was no question of assessing the merits of the known scripts.' Eventually the Indic medium revolutionized the contents, the thought processes and the modes of expression in the Tibetan language. The role of the Sacred Letters is second only to that of the Sacred Doctrine in the history of Tibet.

The other event is the doctrinal debate between the Indian (Kamalasila) and the Chinese (Hoshang) in the last decade of the eighth century. The debate was necessitated by two different views on the attainment of Nirvana.[4] As modern researches bear out, either view was valid and the Tibetan support to the Indian exponent was really because he was a native of Aryabhumi and as such his exposition was accepted as authentic. In any case, the victory of the Indian Pandita was the reflex of Tibetan mind. The Tibetans ceremoniously expelled Hoshang from Tibet and banned for ever the preaching of Dharma by the Chinese. Till the 1950s the Expulsion of Hoshang was a popular mystery play in the monasteries of Tibet.

With the above prefatory remarks one may proceed to examine the peculiar political system which functioned in Tibet for over three hundred years (1642-1951). It was a system in

which authority finally vested in the monks (Lamas), and the hierarch (Dalai Lama) as the incarnation of Avalokitesvara (Tib. Spyan-ras-gzigs, pronounced Chen-re-sik) was 'the supreme civil and religious ruler of Tibet' and 'enjoyed a real divine right and unlimited prestige'.[5] While the actual administration was a sort of dyarchy of monks and lay elements, all powers—temporal as well as spiritual—belonged to the monks, the Gelugpa Lamas.

In the present writer's finding the capture of political power by the Lamas and the conduct of state business by the Lamas did not lack sanction in the Indic context.[6] Though Indian history does not provide any prototype for the Lamaist polity, Buddhist literature (Pali and Sanskrit) has enough to render legitimate government by the monks. This sanction is writ large in (i) the basic concept of early Buddhism ; (ii) the basic cocept of Mahayana Buddhism ; and (iii) the Indic ethos which sought harmony between spiritual and temporal needs.

(i)

I take refuge in the Buddha

I take refuge in the Dharma

I take refuge in the Sangha

With the growth of a community of lay believers, the Sangha battling against *Jati-Varna* (caste and social inequalities) as well as *Jati-Marana* (mundane sufferings) was destined to become the refuge in a temporal sense. While the Buddha and the Dharma were intangible and transcendental objects, the Sangha was tangible and immanent. For its own merits like social and humanitarian services and for favour of the kings who took refuge in the Three Jewels, the Sangha could evoke submission without reservation. The promise of universal salvation in Mahayana evoked a deeper submission. In Mahayana the Sangha came to be designated as Bodhisattvagana, that is, a corporation of saviours who deferred their own Nirvana for the welfare of the entire community. The Sangha played the leading role in the migration of

Mahayana from the Indian plains to the Trans-Himalayan highlands and was from the beginning the leading Jewel in the Tibetan mind.

In the beginning, that is, for more than a century and a half, the Sangha in Tibet was composed of Indian monks and priests. As history bears out, they were men of character, learning and determination and individually they made deep impression, thus contributing to the high stock of the Sangha. The Sangha was not only the custodian of the Sacred Doctrine and the Sacred Script but also the instrument of a collectivist striving for salvation. The Bodhisattva doctrine had struck a responsive chord among nomadic and pastoral people.

Because of the socio-economic climate of Tibet and because of the needs of firm propagation, the Sangha did not keep any distance with the laity. Thus refuge in the House of Lamas (Bla-brang) was naturally sought in times of distress when the central monarchy broke down and people were oppressed by decadent aristocrats and rising brigands. Towards the beginning of the twelfth century, the Kargyu and Sakya Lamas had built monasteries which superseded in grandeur and authority the castles of the nomadic and pastoral lords. The great Lama rulers of thirteenth-century Tibet were the Rajagurus (Bakshi/Tisri) of the Mongol emperors and were called by the Tibetan devotees as Skyabs-mgon (Lord of Refuge). Refuge in the House of Lamas was anticipated when the great Indian saint-scholar Atisa, who came to reform the decadent Dharma (1042) and passed away near Lhasa (1054), had approved the Tibetan practice of prefixing 'refuge in the Lama' to the Refuge Formula. The formula was now

I take refuge in the Lama (Bla-ma or Guru)

I take refuge in the Sang-gye (Sangs-rgyas or Buddha)

I take refuge in the Chho (Chhos or Dharma)

I take refuge in the Gendun (Dge-hdun or Sangha)

(ii)

The thirteenth-century Lama-rulers made Tibet a first-class power of the day and had proved the entitlement to temporal

authority of a spiritual figure like 'the incarnation' (Skt. Nirmanakaya = Tib. Sprul-sku). Indian scriptures (Pali and Sanskrit) as well as Tibetan commentaries abound with mundane responsibilities of the Bodhisattva including grant of refuge, relief of distress and maintenance of law and order. As the Bodhisattva could take the form (Nirmanakaya) of a monk so he could take the form of a king. To reign, that is, to maintain law and order is a mundane obligation of the Bodhisattva.

The Sakya hierarchs were recognized as the incarnations of Manjusri. The Gelug hierarchs (Dalai Lamas) were recognized as the incarnations of Avalokitesvara. This had great temporal significance. In Mahayana texts, Avalokitesvara features as the topmost Bodhisattva ; he reigns without a rival ; he protects the weak and distressed in the manner of a universal sovereign. In Tibetan tradition Avalokitesvara is the founder and protector of the race. The *plenitudo potestatis* of the Dalai Lama was built as much on the Indian Buddhist canon as on the Tibetan national legends. But the Yellow Sect (Gelug Lamas) sought the sanction of their hierarch's political role in the original Dharma and designated the hierarch as the Skyabs-mgon (Lord of Refuge). This title flowed out of the Refuge Formula and recalled the *Saddharma-pundarika* episode of the Buddha being addressed as 'Mgon-po (Lord), Thou art the most excellent Skyabs (Refuge)'. The present Dalai Lama sticks to the historic title as is evidenced in the Tibetan text of the Constitution of Tibet promulgated from Dharamsala on 10 March 1961.

(iii)

The practice of monks and priests devoting themselves to state business is not contra Dharma. The Indian ethos as it had developed prior to the migration of Mahayana to Tibet favoured harmony between the spiritual and the temporal needs of existence. It had even admitted priority of the artha (material needs) over the dharma (spiritual needs) for a fruitful existence. The Vedic scale of values absolutely fixing dharma as paramount was later challenged in the artha literature. Eventually, dharma and artha came to mutual aid

as did the Brahmana and the Kshatriya. Buddhism likewise began with an antagonism between theology and statecraft, but could not deny for long the national ethos. The Buddhist diction right from its inception was fraught with temporal implications. The words chakra (चक्र) and chakravarti (चक्रवर्ती) or sasana (शासन) and (शास्ता) conveyed temporal as well as spiritual attributes ; sangha was as much a term of politics as of religion. While in Mahayana texts the Bodhisattva as king was a normal feature, in the Pali Vinaya, proficiency of a monk in worldly wisdom was not a sin. In later tradition Sramana along with Brahmana was found to be the root of society. In Tibetan tradition chhos (dharma) and srid (samsara) were described as complementary components in the way of life. The description Chhos-srid-gnyis-ldan (one which has both dharma and samsara) used in state papers of Tibet clearly brings this out.

The Indian concepts and ethos, as culled above from Pali and Sanskrit sources, are not to be construed as having shaped the history of Tibet. These Indian concepts and ethos provided the doctrinal background for the Lamaist state and are thus relevant to the history of Tibet.

NOTES

0. All dates are in Christian era.
   Transcription of Sanskrit and Tibetan words is without diacritical marks.
1. Indian reaction is found in Jayaswal : *Hindu Polity* (Calcutta, 1924/Bangalore, 1943), Ch. XXI.
2. Chatterji : *Kirata-Jana-Krti* (Asiatic Society, Calcutta 1951), p. 93.
3. Edward Conze : *Buddhist Thought in India* (London, (1962), p. 172 f.n.
4. Paul Demieville : *Le concile de Lhasa* (Paris, 1952) and Giuseppe Tucci : *Minor Buddhist Texts*, Part II (Rome, 1958).
5. Words quoted are from a British handbook for official use, *Tibetan Precis* (ed. 1945, Richardson), p. 92.
6. This account anticipates a substantial portion of my forthcoming work on Lamaist Polity. Much of the textual data (Sanskrit and Tibetan) will be found in my papers contributed to *Bulletin of Tibetology* (Gangtok), Vol. V, Nos. 1-3.

MISCELLANEOUS NOTES

Discussion Cultural Relativism at the Indian Philosophical Congress, 42nd Session, Patna (29 December 1968).

We are glad that eighteen of the participants have raised questions relating to the three papers presented this morning by Dr. Prasad, Rev. de Marneffe and myself. Out of these, let me confine myself only to those which have reference to my paper.

The questions raised are of three kinds: (1) The first series relates to a definition of culture; (2) the second is with regard to the caste system, and (3) the third is about the evaluation of cultures.

As I have already stated in the beginning of my paper that I am using the term 'culture' in a particular sense. I believe it is not necessary to go into the question as to whether that definition is valid, and there could not be a better or alternative ones.

It is also not necessaay to deal with the second question relating to Caste. Caste was chosen only as an illustration; any other institution could similarly have been taken up in its place, e.g. the *family organization* or democratic political *organizations meant for local self-government*, etc. My intention was only to *illustrate* how, *on account* of changing human experiences, the same institution plays a *different* role in the life of a people in course of time. Although there is an apparent continuity of form yet the function of the same institution may vary widely on accout of new demands of life. The form of an institution may also consequently change to a greater or less extent.

Whether the historical picture of the caste system as presented by me is accurate or not is not immediately relevant to the question under discussion in the symposium. I have not tried to *defend* the caste system, but described in a broad sweep the values which t enshrined at different points of time in Indian history.

Everybody would substantially agree with the fact that both the form and function of human institutions change. The question to which we have to address ourselves is: Is one particular phase of an institution *better* than another? Is there an absolute standard by means of which institutions, or even cultures or civilizations, as a whole can be evaluated?

The third question alone therefore remains for our consideration.

Let me take up two very different cultures and value-systems, and see if we can compare them by means of any common standard.

The Eskimo live in a very harsh environment. There is almost always a chronic shortage of food; and when the pressure becomes acute, it was one of the customs among the old men to perform a kind of suicide so that the rest of the community would be able to live by the slender resources which were still available. An old man might invite his son to strangle him to death by means of a leather thong. Or he might ask his sons to intern him in a stone house and then close the door completely by blocking the passage by means of stones which he would be unable to move. In other words, a man would thus refuse to be a drag upon his little community, and lay down his life voluntarily for their welfare. This was apparently regarded as a highly moral act.

Let us consider a Nation-State by way of comparison. During the last world war, millions of men and women were prepared to lay down their lives so that their nation could live in freedom. For instance, grave risks were taken by the Russians in Stalingrad, by English and American soldiers in the European and Pacific theatres of war in order to bring the war to a speedy end. In course of that noble adventure, the Americans also dropped the world's first atom bombs on Hiroshima and Nagasaki in Japan. As a result of this, and naturally of many other battles fought, the war came to an end. Humanity was apparently saved from further suffering.

Those who risked their lives, fought bravely, killed the enemy in large numbers, obviously felt that they were engaged

in a highly moral act, namely, the defence of the world from the dangers of Fascism.

Now, the question is : Is there any way by means of which we can evaluate comparatively the moral act of a single Eskimo who by laying down his life saves his children from starvation, and the sacrifice of millions of soldiers who laid down their lives in order to bring about an end of Fascism ?

Personally, I find it hard to decide as to whether one is superior to the other. Some of my friends would perhaps say that where, by means of a moral act, the lives of *many* people are saved, it is superior to another in which fewer people are affected. Or they might also claim that, if a civilization encourages *many* people to lay down their lives, then it is superior to another which encourages fewer people to do so.

The question which I would raise is : Is quantity then the absolute standard by means of which we determine the superiority of one moral act over another ? This mechanistic way does not have any appeal for me personally. To my mind, this is almost a vulgar way of saying that the bigger a thing is, the better it is.

In any case, I have tried in my paper to show that there can hardly be an absolute standard for the measurement of goodness or of progress.

And yet, we have indeed to judge if we have to live in the midst of fellow human begins. We have to, and do choose. We also judge.

All that I have tried to say is that if we examine the basis of our judgements, of the values which afford us a justification for our moral action, we discover soon enough that they arise because we are enmeshed by the sufferings of fellow human beings, and are trying to find a way out of them. The problems which we try to solve and the solutions we choose are all governed by contingent circumstances.

The question is : Are we justified in applying these very local and temporary standards to the evalution of *other* lives and times, and of *other* civilizations ? We undoubtedly do so ; and even the need of that arises out of the demands of thought and action in the immediate present. But should these demands justify us in treating them as absolute standards ?

My suggestion is that they should not.

Nirmal Kumar Bose

BOOK REVIEWS

Race—A Christian Symposium. *Edited by Clifford S. Hill and David Mathews. With a Foerword signed by Archbishop of Canterbury, Cardinal Archbishop of Westminster, Moderator of Free Church Federal Conncil. Pp. 192. London, Victor Gollancz Ltd., 1968. 30 shillings net.*

Since the termination of the second world war, England has received a very large number of immigrants from the Commonwealth countries. For example, Jamaica has been responsible for about 250,000 or more citizens (including those of Jamaican parentage), while among those who have gone from India and Pakistan, only perhaps 20 per cent can speak the English language, while many retain their Hindu or Moslem beliefs. This has created very serious problems all along the social and political frontiers, which eventually have led to serious riots against coloured folk in the last few years.

The book under review examines the problem of race-relations specifically from a Christian point of view. The best minds of England have been deeply touched by this explosion of racial prejudice. There is a belief that xenophobia had always been present in a latent state in the English mind ; only, it has burst out in the surface today on account of several historical causes.

This collection of eleven essays from the pen of very competten scholars is a welcome addition to the literature on race. There is one chapter on the history of migrations, a second one on the biology of race, while one towards the end gives us an account of the reaction which the colour question has had upon three Christian immigrants from India, Africa and the West Indies. The other chapters mostly examine the question from a religious point of view. They are deeply inspired by the basic doctrines of Christianity ; and suggest how one can effectively create a brotherhood among men only by reliance upon what Christ taught mankind.

It is a moving book ; but it also indicates in a way the enormity of the problems facing mankind in a shrinking world, made possible by modern means of communication.

N. K. Bose

The Hindu Avatars : Suggestions for their historical identification. *By Amulyachandra Sen. Pp. 26. Sold by Saraswat Library, 206 Bidhan Sarani, Calcutta-6.*

Dr. Amulyachandra Sen's name is well known in the field of Indology. In the present pamphlet, he has suggested that the 'avatar stories may have originated from reports about the great kings of other lands' (p. 4). After a very original attempt at identification with some of the kings of Egypt, Babylon etc., he has tried to show that 'in the Puranic details (there is) a vague, faint or much blurred reflection of the historic achievements of the foreign kings' (p. 5).

N. K. Bose

Hindu Society—An Interpretation. *By Irawati Karve. Second edition, 1968. Pp. xii + 180. Deshmukh Prakashan, Budhwar, Poona 2. Rs. 15.00.*

This is the second edition of a well-known book first published in 1961. It contains two new chapters, one of which happens to be the modification of a chapter in the first edition which has been dropped.

The principal thesis of Professor Karve is that *Jati* and *Varna* represent two different systems, the former being probably of pre-Aryan origin in India. The Aryans tried to accept it after modification, and thus made it their own. In the field of higher culture again, there was a constant accretion, just as there was constant agglomeration in the social sphere. This accretion of faiths was made possible by the way in which the Brahminical people looked at Absolute and Partial truths.

The book is thoughtful and stimulating.

N. K. Bose

Democratic Socialisation and Participant Alienation in Mahi Village Panchayat (Kaira District, Central Gujarat). *By Dr. K C. Panchanadikar aud Dr. (Mrs.) J. Panchanadikar. (Project Report submitted to the National Institute of Community Development, Hyderabad, Andhra Pradesh.)*

The field study in Mahi village was conducted between August 1961 and August 1962. Six villages responsive to community development programme were chosen as alternatives, to finally select one amongst them for intensive study. The study included

'the consequences of major-minor combinations within a community'. The field-work consisted of structured interviewing to study caste structure, inter-caste relations, social change under the impact of planned development since 1951, and the village administrative personnel.

The study consisted of four parts —

(1) Community Setting and Determinants of Power, including Landed Assets and Adult Population, Educational Achievements and Caste Influence in Business Associations ;

(2) Political Structuring and Socialization Process. The evolution of the Panchayat from May 1941 to March 1952 has been traced. Detailed study of the rural civic structure with reference to water supply and watch and ward has been made ;

(3) Participant Alienation and Instability. The conditions in the Panchayat from March 1956 to February 1961 have been narrated ;

(4) Political Consequences of Development Investment. The affairs in the Panchayat from February 1961 to February 1965 have been traced.

The interesting data that have been made available under various aspects of local administration are worth studying for further follow up. For instance, Table 18 reveals that 14 out of 80 meetings called had no quorum. During the 58 months of its tenure, this panchayat held meetings in each of the 50 months. The fifth panchayat passed an impressive total of 360 resolutions.

When there was a request through Government for grant of a larger plot of land for use as *Chamar-kund,* for tanning and processing of leather by the local Chamar caste, thus stressing on the panchayat the need to encourage and support the community's occupational venture, the panchayat, with great reluctance, resolved to part with 0.3 acre of its waste land, Similarly, the request of the Milk Producers' Co-operative for allotment of land for water-taps did not find a happy response from the panchayat. The authors conclude that these two episodes of lack of response on the part of the panchayat point to the total unawareness of the local authority of its responsibility to encourage and activate local occupational enterprise.

It has been stated that just as the national bourgeoisie is supplanted politically by the white-collar professional politician, in the rural areas it is being replaced by a class of vernacular and semi-English educated political bosses. When the question of housing the Vaghris, the backward community in the village arose, the panchayat instituted legal action against them for raising unauthorized hutments on the waste land without prior permission. The authors conclude that this incident reveals lack of understanding and the need to adequately motivate houseless sections of landless labourers if they are to be committed to agricultural work. In their view, the panchayat had no long-term vision and perspective of economic development.

An interesting study into what the authors call 'the Sociology of Developmental Credit' has been made of the loans distributed out of the Block funds. Out of 20 applications for agricultural and land-improvement loans, a sum of Rs. 67,750 was sanctioned to 12 families, all of whom happened to be Leuwas. There was a subsidy of Rs. 1,500 in each of the loans for the purchase of oil engines, which is the main attraction about these loans. The largest single amount of Rs. 23,000 was borrowed by the wealthiest landowner, who happened to be a tobacco dealer in the village. The economic concentration of power in the majority communlty community is revealed by the fact that out of 2,064 shares, the Leuwas held 1,753 and the non-Leuwas 311, in the three co-operatives.

The authors have made a useful contribution to the existing literature through this painstaking and careful evaluation of the impact of local development programmes on caste and community structure at the village level.

O. K. Moorthy

The Year of the Gorilla. *By George B. Schaller. Pp. x+260. 1964. The University of Chicago Press, Chicago.* $ 5.95.

The author spent a year studying the Mountain Gorilla in an area where the province of Congo meets Uganda. The scientific account of their behaviour is presented in another book published by the University of Chicago, which is edtitled *The Mountain Gorilla : Ecology and Behaviour.* The present book gives us a pleasant and popular account of the country where the author

worked. He tells us about the plants, mountains and rivers, and also about the gorilla who inhabit this region.

The description of nature often rises to poetic heights, and one is strongly reminded of Thoreau's *Walden* as he journeys through the forests in company with the author.

N. K. Bose

The Sema Nagas : *By J. H. Hutton. Second edition. 1968. Pp. xviii + 467. Oxford University Press, Calcutta. Published by the direction of the Government of Nagaland. Rs. 40.*

Professor J. H. Hutton's books on the Sema and Angami Nagas are classical works in Indian anthropology. This particular volume was first published in 1926 ; it was based on the author's work among the Sema between 1915 and 1920. Then the Sema were mostly 'Pagan', now they are nearly all Christian. A very great change has thus taken place in the course of the last fifty years. It is, therefore, all the more necessary that the ancient account should be made available to anthropologists and administrators ; for both are deeply involved in the economic and political advancement of Nagaland.

We are glad that the Government of Nagaland is sponsoring the re-issue of these classics.

N. K. Bose

Temples of Tripura. *By Adris Banerji. Pp. 22. + Frontispiece + half-tone plates + 2 line drawings. 1968. Prithivi Prakashan, Varanasi 5. Rs. 10 only.*

Tripura lies near the eastern end of India. Near by is Buddhist Burma. The author of this small book has described in detail a number of temples in Tripura belonging to the 17th Century which show an interesting combination of the Bengali (Gauriya) Order and an element derived from Buddhist stupas. He also traces the early history of each of these orders to ancient times. Mr. Banerji's observations are original and convincing.

N. K. Bose

Sea Routes to Polynesia : American Indians and Early Asiatics in the Pacific. *By Thor Heyerdahl. Pp. 232. 1968. George Allen and Unwin Ltd. Ruskin House, Museum Street, London. 42s. net.*

Thor Heyerdahl has accomplished one of the most daring feats of seafaring in the present century. After a very careful study of

currents in the Pacific, and the sea-worthiness of Inca rafts, he sailed in 1947 on his famous Kon-Tiki expedition. His researches have never ceased ; and with the co-operation of archaeologists and botanists he has been able to show how the Incas of Peru were able to reach as far west as Polynesia. Archaeological excavations in the Easter Island indicate that there was a long succession of cultures spreading over more than a thousand years when culture was succeeded by culture until the Polynesians eventually came into dominance.

The book under review presents many of Dr. Heyerdahl's lectures or papers relating to the stratigraphy of cultures in the Pacific islands and of the dispersal of various food-plants, which offer almost unchallengeable evidence of American contact before the coming of the Spaniards.

One of the most fascinating chapters is formed by an account of the manner in which balsa-rafts were navigated by means of centre-boards raised or depressed, in conjunction with the manipulation of sails by the Incas. These rafts had no rudders ; but the extremely original manner in which they were navigated shows the mechanical ingenuity of the American people in question.

One of the most interesting features of Dr. Heyerdahl's work has been that, after each such re-discovery of ancient techniques, he tried them out himself by venturing in the open sea, when he was able to cross thousands of leagues in the same manner as the ancient people.

In one place, he says that he did not depend so much upon courage but confidence, which was undoubtedly the result of the meticulous care with which his researches were conducted.

It is a fascinating book which should be welcomed by every anthropologist and archaeologist. Both will end by admiring the scientific integrity as well as the intrepidity of an explorer of the first rank.

N. K. Bose

Bankura : West Bengal District Gazetteers. *By Amiya Kumar Banerji. Pp. x + 624 + 18 art plates + maps. Calcutta : Government of West Bengal. 1968. Rs. 25.00.*

Ever since the days of W. W. Hunter, gazetteers have been a special feature of the Governments' publications. There has been a steady evolution from Hunter's time till today ; and the present

volume produced by the Government of West Bengal admirably maintains the progressive trend observable in their production.

There are fifteen chapters which deal with the history of Bankura, its people, agriculture, industries, economic trends, administration, health, etc. These are followed by an account of places of interest.

An interesting feature of the the book is formed by descriptions of social life, the schools of music, and the lives of eminent men of Bankura, like Ramananda Chatterji, which have been furnished by scholars who do not belong to the governmental establishment. This has added a new dimension to the value of the present publication. We only wish that this were also followed in other States of India.

The photographs and maps are of high order.

N. K. Bose

The Tantric Tradition. *By Agehananda Bharati. London : Rider and Co., 1965. Pp. 349, bibliograpical selection, index. 50s.*

This is a difficult book, and is meant neither for a beginner nor for a layman, but for the 'initiated' who wants to know more of a philosopical tradition prevalent in India and Tibet. In fact, one has to read it slowly, and more than once to understand the ritual and religious background of a very sophisticated system of symbols.

The Tantric tradition has been subject to study both in the west and in the east for some decades, and has been misinterpreted quite often. Here, for the first time (in a European language), we have a balanced critical view, an analytical approach to the topic. Those who know Swami Bharati personally, the author of *The Yellow Robe*, the Austrian monk, who lived in India for some time and is now a professor of anthropology at Syracuse, will not be very much surprised to get such a book. His study is a useful contribution to research and theory in Tantricism in general. His theoretical concepts have been derived from linguistics, cultural anthropology, and philosophyand these have been used to unravel one of the 'esoteric' aspects of a very complex culture. I admit I have had hard times to follow him in one single reading. At the first glance, it may seem to be too much of a

western interpretation, but nowhere has Swamiji left gaps to understand the situation ; though some problems could have been raised and/or elaborated.

The book is divided into ten chapters which can be read separately. The first two chapters deal with the philosophical content of Tantra and Tantric terminology; chapter 4, 'India and Tibet in Tantric Literature', emphasizes separation of traditions and lack of intellectual discourse between India and Tibet, though 'pilgrimage' stresses the potential erasure of physical separation. The use of language to produce certain effects has been well diecussed in chs. 5 ('On Mantra') and 6 ('On Intentional Language'). Chapters 7 and 8 ('On Initiation'; 'Polarity Symbolism') bracket the induction of the disciple, aims. Chapter 9 brings together disciple, doctrine and goal in practice. Chapter 10 places Tantra against Indian and Western misconceptions of its nature.

Tantricism, as conceived and practised in India and in Tibet, is, in fact, formed by two different branches of one tradition ; in terminology, symbolism and in regard to goals they differ markedly. This has very carefully and logically been pointed out by Swami Bharati, though he has stressed the Tibetan doctrine throughout. Several important issues remain untouched in the book, e g. the geographical restrictions of Tantricism ; the extent of Tibeto-Burmic *Weltanschaungen* in Tantricism ; the social and a-social aspects of the doctrine in the day-to-day life of a part of the country, specially as reflected in literature, some of which has been discussed in Edward Dimock's book, etc.

However, as a student of cultural anthropology and language and society in India, I propose to keep this book quite handy near my writing table. This is a wonderful book for which we must thank Prof. Bharati.

S. K. Ghose

Statement about ownership and other particulars about newspaper *Man in India* to be published in the first issue every year after the last day of February.

FORM IV

(See Rule 8)

1. Place of Publication—27/3-B, Hari Ghosh Street, Calcutta-6.
2. Periodicity of its publication—Quarterly.
3. Printer's Name—Ajit Kumar Bose.
   Nationality—Indian.
   Address—27/3-B Hari Ghosh Street, Calcutta-6.
4. Publisher's Name—Ajit Kumar Bose.
   Nationality—Indian.
   Address—27/3-B, Hari Ghosh Street, Calcutta-6.
5. Editor's Name—Nirmal Kumar Bose, M. Sc., F. N. I.
   Nationality—Indian.
   Address—37-A Bosepara Lane, Calcutta-3.
6. Property of which the following are Executors :
   Sri Haridas Ghosh, 28/1A, Gariahata Road, Flat No. 8, Calcutta-19
   Srimati Mira Roy, 18 Church Road, Ranchi (Bihar)

I, Ajit Kumar Bose, hereby declare that the particulars given above are true to the best of my knowledge and belief.

Dated 25th February, 1969

Signature of
Publisher—Ajit Kumar Bose

MAN IN INDIA

VOL. 49 APRIL-JUNE 1969 NO. 2

THE CONCEPT OF DIKU AMONG THE TRIBES OF CHOTANAGPUR

S. C. Sinha

Jyoti Sen

Sudhir Panchbhai

(*Received on 22 January 1969*)

Abstract: The term *Diku* is widely prevalent among the different tribal communities of Chotanagpur and adjacent areas for defining the non-tribal out-groups. A field-enquiry was made in Chotanagpur during February-May, 1967, with a view to studying the social and cultural context of the term *Diku* which stands out in contrast to the term 'Hor', 'Horo' or 'Ho' meaning 'man' used to designate one's own tribal group. It appears that the term *Diku* does not include all the Hindu castes of the region but only those who are considered to be 'exploiters'. The tribals do consider the symbiotically-related local artisan groups and also the Hindu rajas of those areas as *Diku* because they have been attuned to the regional moral order through long association. In the more Hinduized areas, such as Tamar and Barabhum, the Munda or the Bhumij, specially their aristocratic strata, include even the sacerdotal castes like the Brahman and the Vaishnava within the social sphere of intimacy.

THE term *Diku*, *Dikku* or *Deko* seems to be widely prevalent among the different tribal communities of the Chotanagpur plateau and its adjacent areas for defining the non-tribal out-groups. One comes across this term in the

anthropological literature dealing with the tribes of this area as well as in other official reports, such as, District Gazetteers, Linguistic Survey, Census Reports, etc. The term is closely associated with the tribal rebellions in this region, such as Santal Rebellion (1855), Birsa Movement among the Munda (1895-1900) and so on and, also, with the recent political movement for establishing the tribal state of Jharkhand covering Chotanagpur plateau and the surrounding tribal areas.

In the course of a short field-enquiry during February and May, 1967, among the Munda, Oraon and the Ho in Ranchi and Singhbhum districts in connexion with the study of inter-tribal solidarity movements, it was observed that the tribal respondents were not always very clear or unanimous about who the *Dikus* were and what the term meant. An attempt will be made in this paper to present the views of various writers on this term, along with the opinion of the people interviewed by us. This will be followed by a brief discussion of the social and psychological context of this term. It may be mentioned here that the concept of out-group in the contrastive field-situation of the Munda-derived Hinduized Bhumij of Purulia and Singhbhum district has also been utilized in writing this paper on the basis of Sinha's field-work in the region during 1950 to 1960 (see Sinha 1957, 1962, 1965).

Hoffmann, in his *Encyclopaedia Mundarica*, gives the following meanings for the term *diku*...'1. a Hindu, 2. a Hindu landlord, 3. Hindi or Sadani' (1950 : 1062-63). According to the same author, *diku-n* means ; to make oneself the landlord of a village ; and *diku-n* means 'to become the landlord of a village' (*ibid.*). Bödding in his *Santal Dictionary* translates *Deko* as : 'a Hindu or Bengali (of the better class, not low-caste Hindus, e.g. Doms, Bauris, Hadis. Mohammedans are not called *deko*. Any Indian in good clothing, seen at a distance, so that class or race is not recognized will be styled *deko*). *Deko hopon*, the Hindus as a race (i.e. those mentioned above ; a Dom or Bauri will not be counted as *Deko hopon*) (1934 : 69).

In Grierson's *Linguistic Survey of India*, Vol. IV, the

Korku, whose language and culture are believed to have affinities with Kherwari or Mundari groups have a term *di*— meaning 'that' and *diku* denoting 'those' (1906 : 167). In connexion with this, Russel, in his Chhindwara District Gazetteer, has said, 'They generally go by the name "Korku" or tribesmen, "Koru" being their translation for a man, the term "ku" forming the plural, as di—that, diku—those' (1907 : 72). But there is no evidence to show that the Korkus use the term *Diku* in the sense in which the Chotanagpur tribes use it.

In the official reports and anthropological literature mentioned above, the terms *Diku*, *Dikku* or *Deko* have been used to mean 'foreigners' or non-autochthones. In the Bengal District Gazetteers of Singhbhum and the Santal Parganas (1910), *Diku* has been explained as 'foreigners such as *goalas*', and 'foreigners or non-Santal immigrants who flocked in to carry on trades and money lending among the Santals'. Majumdar (1950) has used it as a synonym of foreigner and so also has Dutta-Majumder (1956).

The term as understood by the different educated Adivasis ('the indigenous people' or 'original inhabitants', namely, Munda, Oraon and Ho) interviewed by us may be summed up as follows :

1. The term *diku* is derived from Sadani '*dik dik karna*', i.e. to trouble or to vex. It means non-Adibasis in general and zemindars and their servants in particular.
2. *Dikus* are non-Adibasis, e.g. Biharis, Marwaris, Muslims etc.
3. *Diku* means a foreigner and it includes Europeans and Mohammedans in its general meaning. It was used specifically for landlords, rajas and their servants who were outsiders.
4. *Diku* means '*dik dik karne-wale*' (those who trouble). It usually means outsiders, capitalists and money-lenders.
5. This term is used to refer to the non-Adibasis in general and includes zemindars, Rautia, Brahmins etc., Hindi-speakers, the Biharis.

6. During British regime when the zemindars were powerful they were called *Dikus* ; but after the abolition of the zemindary system they have lost their hold and now the other influential persons in the village, whether tribal or non-tribal, are designated as *Dikus.* But the Munda, Pahan or Mahto, i.e. the traditional leaders are never considered as *Diku.*

The uneducated tribal informants interviewed by us have a similar, though less articulate, notion of *Diku* in their mind. A few representative examples are quoted below :—

1. *Diku* means zemindars and their Hindu servants.
2. It means outsiders and refers to those who are from North Bihar in particular.
3. Outsiders (*Bihar ke log*) who are not Adibasis, e g. Baniyas, Biharis, Bengalis.
4. People like you are *Dikus* ; those who have come from outside.
5. People from the bazaar ; Biharis and Baniyas who are not Adibasis.
6. All non-Adibasis who speak languages other than Adibasi dialects, and so on.

A very interesting way of demarcating the *Dikus* and the local people came from a tribal political leader in Chaibasa. According to him, those who earn and send their earnings outside to their homes are *Dikus.* The supporters of this line of thinking put more emphasis on the criterion of domicile, and argue that the old inhabitants of Chotanagpur, irrespective of language, religion or race are not *Dikus.*

Though the term *Diku* seems to include the Hindus in general, yet a closer view reveals that it excludes such caste-groups as the Lohar (blacksmiths), Dom (basket-makers and drummers), Swansi (weavers), Chamar (leather-workers), Teli (dealers in oil), Tanti (weavers), Kumhar (potters) and other artisan castes who are in the lower range of the Hindu hierarchy. These are castes which have lived side by side with them in the same village for generations, and with whom they have developed a symbiotic relationship to such an extent that

they have become a part and parcel of the broader tribal society. Therefore they are not categorized as *Dikus* generally. Besides the Pahan and Mahto, the other village officials in an Oraon village are the Ahir, Lohra, the Gorait and the Kumhar (See Roy 1915 : 116).

On this point, there is a slight difference of opinion between some of the educated respondents and the uneducated tribals. According to the former, in the literal sense of the term, these people are also *Dikus* since they are non-Adibasis, but actually they are not looked upon as *Dikus*. To some of these educated respondents they are 'detribalized Adibasis' and to others, they are 'tribalized Hindus'. The general feeling expressed by them was—'They are not Adibasis but they are not *Dikus* either', or 'In between *Diku* and Adibasi there are the low castes among the Hindus who are inter-dependent with the Adibasis. They are the non-*Dikus*.'

The uneducated common village people show a slight variation in their notions about these groups. To them they are not *Dikus*, but just Doms, Lohars, Swansis or such other castes. In some cases it was also observed that they are considered as Adibasis.

Though the low castes occupy the bottom of the economic and social pyramid and the high castes are generally on the top, in certain areas such as Tamar, the former are further divided on the basis of their socio-economic status. For example, the Hajam and the Dhobi of this area who are economically well off and form numerically as well as politically a dominant group, are looked upon by the uneducated tribal folk as *Dikus* whereas the same caste-groups in the adjacent Khunti area, where their economic or social status is comparatively lower, are not regarded as *Dikus*

The degree of '*diku*-ness' thus appears to be closely associated with economic prosperity and socio-political standing. This is further supported by the fact that while talking of the Lohar, Ahir, Chikbaraik, Ghasi and the Dom the Munda state that these people are neither Adivasis ('aboriginals', 'tribals') nor *Dikus* but they are 'servants' of the Mundas. Where the above opinion prevailed, it was observed that the

above-mentioned castes occupied a lower rank than the Adivasis in the village hierarchy, both socially as well as economically. Thus, in their opinion, some are more *Dikus*, such as the Bihari, Marwari etc. Some are less, e.g. Dhobi, Hajam etc. while certain others are non-*Dikus*, e.g. Lohar, Dom, Ghasi etc. In short, those who are economically higher than the tribal communities are looked upon as *Dikus*, the degree of '*diku*-ness' increasing in proportion to the rise in the above scale. Those who are on a par with the tribals or below them in the above scale are considered 'less *Diku*' or 'non-*Diku*'. There are, however, some exceptions to the above rule. The Hinduized Munda chiefs of Tamar Pargana, for example, are not regarded as *Dikus* but as Munda. Similarly, the Rajput Raja of Tamar and Maharaja of Chotanagpur, although not regarded as Munda, are not regarded as outsiders or *Diku*. It should be emphasized at this point that although the educated tribals, and even some of the illiterates among them, used the category 'Adivasi' meaning thereby 'autochthones' and the officially designated 'tribal' groups, the term 'Adivasi' is not an endogenous native term of these tribal groups. The Munda, for example, call their own people as *Horo* ('men'), but the neighbouring Oraon and the Ho by their respective tribal names. None of these tribal groups have a generic name for 'tribe' as a category *vis-a-vis* the castes, except by the negative character of 'non-*Dikus*'. The tribals do not regard the Christian converts as *Dikus*. A Christian Munda is *Horo* but he is also *Isai* only in religion.

It is interesting to note that while these tribes are very specific about regarding the Hindu upper castes as *Dikus*, they label the Moslems as *Turks*. It seems that the tribals, in terms of their past historical experience, are less threatened by the numerically scanty Moslem immigrants who are not particularly well off in contrast to the economically dominant and numerous Hindu immigrants. The tribals also do not have much prejudice against the very few Europeans (*Pundi Horo* = white men) who are around in the area, for they do not threaten the tribals either or in terms of economic deprivation.

Image of a Diku in the Tribal Mind

Certain attributes, mostly unfavourable, are ascribed to a *Diku* as a stereotype. This becomes clear when its different meanings (overt or implicit) are analysed in different contexts. This also gives an insight into the inner world of their attitude towards the out-group. For example, it is generally thought that the *Dikus* are looters (*re re ko menakoa*), trouble-makers (*sigid ko menakoa*), deceivers (*chakad ko menakoa*), exploiters, cheats, unreliable, and those who have a sense of superiority and inspire fear. The dread of the *Diku* appears to be so deep-rooted in the tribal mind that it has even penetrated into their ritual world. It was reported by an informant in a Ho area that during *Oteili* (a ceremony connected with the land) the Diuri or the Ho priest chants, 'We will kill the witches, the snakes and the *Dikus*.'

Hoffmann has elucidated the term by citing a Mundari proverb in which the word *diku med*, a Hindu's eyes, has been used. '*Dikumed ci setamed* (the eye of a Hindu is the eye of of a dog. Understand, a dog fawns on those from whom it gets food and snarls and barks at all others ; so the Hindus and other non-aborigines fawn on those from whom they expect some profit and snarl at all others' (Hoffmann 1950 : 1062). The other term he uses as illustration is *Dekumed-o* which means to get Hindu's eyes, i.e. eyes which do not want to recognize one's fellows : '*amdohale okoreni helahalem diku medjana ci ? amen din modkoregelan taikena* (from where art thou ? Oh ! I say ! It is impossible that thou should not recognize me, we have been neighbours for so long' (*ibid.*).

Bödding, too, mentions a Santal idiom in which a similar unfavourable image of *diku* is conveyed. *Deko pusi* means 'a Hindu cat, a term of contempt, (said to be due to the Hindus, like cats, being particularly fond of milk and fish)' (1934 : 69). The proverb is 'you may pass with a Santal, you will never pass with a Deko-cat, (i.e. you may deceive a Santal but not a Hindu)'. Similarly, 'a Deko friend a thorn tree, they prick' (*ibid.*).

Even when a tribal acts or behaves like a *Diku* he is looked upon as such. For instance, a Munda who owned a village and extracted rent like a zemindar was said to have become a *Diku*...*'diku hobajana'* (has become a *Diku*). If one adopts the mode of living, i.e. food, dress etc. like a *diku* he is said to be *'dikuleka'* *diku*-like. Even when one of their own tribesmen oppresses another, he is supposed to be *'dikuing'* him, e.g. *Aingam dikujainga* ; I am being *'dikud'* (oppressed) by you. He is, however, not permanently categorized as *Diku*.

It should not, however, be surmised on the basis of the negative stereotypes (the like of which are also there among the Hindu castes) that a visitor to these tribal areas will observe the social relations between the tribal and the upper-caste Hindus steeped in overt hatred. There is only an undercurrent of prejudice which comes to the surface in critical phases of history under the guidance of charismatic leaders like Birsa Munda or of modern political leaders.

It is also observed that the religious or ritual aspects of tribal life are a determinant of social distance. The groups which can share with them their religion or ritual life as equals are their own people, those belonging to their ethnic group ; non-tribals are not allowed to participate in rituals. A certain degree of distance is always maintained with them. Those who have been living with them for generations, speaking their language, sharing their joys and sorrows in village life, have access to their social polity. They, however, observe the same cycle of festivals or even perform the same rituals, but it is done separately and not together with the tribals.

These two aspects of ritual and social participation are amply illustrated in the Maghey and the Sarhul festivals. It was observed in the adjacent regions of Khunti that in the above two festivals the local Hindu castes performed the rituals, but in a 'socially sanctioned segregated' manner. In the festive part they came together in drinking, dancing and merry-making and shared the common mood. The barrier, however, came up when the question of mixed dancing arose. In a village in Singhbhum during the Maghe Parab, some of

the Tanti, Tamaria and Gope boys told us that they felt handicapped in not being allowed to dance with tribal women. 'They say, how can we allow you to touch our women ?'

Though the socio-cultural difference between these caste-groups and the tribes is almost insignificant, still one notices a certain degree of social distance which is maintained by the tribes towards these castes. The caste-groups seem apparently desirous of removing the stigma of this social distance and resent being assigned a lower rank in the village hierarchy. In Singhbhum, one comes across originally Oriya-speaking castes such as Gopes, Lohars, Kumhars and Tantis who have adopted Ho as their mother tongue and have forgotten the Oriya language altogether. Their mode of living also seems to have undergone transformation to a great extent in conformity with the tribal pattern. They represent a typical marginal group in being both a tribe and a caste, but truly belonging to neither psychologically. On the one hand, they have a tendency to diffuse their identity with the tribes and to be one of them by emulating their way of life, and, at the same time, they aspire to be identified with the larger Hindu society which seems to be their dominant reference group. It is due to this reason that at least to a non-tribal outsider they emphasize their distinctness from the tribes. Some of them rather proudly admit that they are also *Dikus* in the eyes of the tribals, while there are others who modify this notion by saying that they are not real *Dikus* like the Brahmins and the Baniyas but are Harijans. Sinha's observations on Lohra, Mahli and Gaur among the Hos also confirm that these castes are not considered *Dikus* (Sinha 1957 : 105). The case of the basket-maker caste cited by Hunter also testifies to this peculiar intermediate position of these castes (Hunter 1868 : 218).

The attitude of the tribal leaders towards these marginal groups and the high castes is, however, divided. There are three shades of opinion representing their sentiment towards the two categories mentioned above. One group thinks that it is unwise to make the Jharkhand Movement, a tribal movement only and exclude all the non-tribals. It is their

contention that all the people of Jharkhand, irrespective of their ethnic group and economic class, should join hands to make it a common cause. To them the Jharkhand Movement is a regional political struggle and cannot score high on a communal issue.

The other group is of opinion that the non-Adivasis, whether belonging to the high or low castes or economic class, cannot be trusted and if taken into their fold will betray the cause of Jharkhand. They express their unfavourable feelings towards both high and low castes. Some even go to the length of saying that the low-caste people have low morals and are parasites on the Adivasis. 'They are liars and thieves and hence they were not taken in as members of the co-operative grain-*golas* organized by the Unnati Samaj in the past.' In relation to the high-caste Hindus they advance a totally different argument, harping on the theme of economic class distinction. These Hindus, according to them, constitute the rich class and are in the true sense, exploiter *Dikus* who have captured not only the trade and commerce but almost every aspect of the economy of their land. 'How can the exploiter participate in the same struggle whose main objective is to get rid of exploitation ?' They ask. In support of this argument they point out that since the inclusion of non-Adivasis as office-bearers of the Jharkhand Party, the unity of Adivasis has been shattered and the movement has suffered a severe set-back almost to the point of failure. It was by a section of these extremist tribal leaders that, during the recent General Election, the old slogan '*Jharkhand Abua, Daku Diku Senoa*' (Jharkand is ours, the dacoit Dikus will go) was revived and made much of.

The third group of leaders consisting of moderates suggests a compromise-formula, going half-way with both the other groups in setting aside this controversy. They warn against the grave mistake of equating the non-Adivasis with the moneyed class. A great number of them, they point out, are poor and are common sufferers with the Adivasis. They will join the movement out of their own interest, they feel. 'We may be socially divided but must remain politically united.

In village life we live together. If we keep them (the non-Adivasis) out, we will create discontent. It will lead to separatism and make us weaker.'

This line of thinking seems to get support from the majority, probably because of the following considerations. Firstly, living together for generations, these non-tribals, because of their useful occupations, have become an inseparable part of the village life and so their fate is automatically tied up up with that of the Adivasis in Jharkhand. Secondly, as they are economically, numerically, as well as politically weak, their inclusion will not adversely affect the power structure of the tribal leadership. And, lastly, as in the present democratic set-up, power and numerical strength are often directly related, the non-tribal 'eternal followers' are considered an asset.

IV

The Attitude of the Diku towards the Adivasis

So far we have tried to give the meaning of the term *Diku*, the attributes and feelings associated with it. At this stage, perhaps it will not be irrelevant to discuss in brief the reactions of the Dikus and their attitude towards the tribals to get a more comprehensive picture.

The non-tribals very often use terms, such as, *Jangli, Jangal jhar ke log, Jangli hat, Vanyajati, Banjati,* meaning 'jungle dwellers' to designate the tribals. They also use the generic terms Kol Adibasi (original inhabitants) and Aboriginals (primitive people). It is interesting to note that while the non-tribals are not much affected by being called *Dikus, Sadans* and so on by the tribals, the latter feel insulted and resent being called *jangli.* They prefer to be called Adivasi, as this term means 'original inhabitants' or autochthones and gives them a feeling of pride that they are the true sons of the soil. Jaipal Singh's statement in one of the meetings of the Constituent Assembly brings out this sentiment to the fore : 'The word Adivasi has grace. I do not understand why this old, abusive epithet of *Banjati* is being used in regard to them for, till recently, it meant an uncivilised barbarian' (Ghurye 1963 : 352).

The terms used by the *Dikus* in respect of the tribals are of a derogatory nature, meaning either 'less civilised barbarian' or 'dwellers of jungles'. The term *jangli*, in particular, conveys both these meanings. The air of superiority in the *Diku* mind is implict in one of their proverbs, *'Na ol sijhe ke, na kol bujhe ke'* (Neither will arum be softened by boiling nor will the Kol understand). Thinking of the tribals as inferior in every respect perhaps serves to soothe the conscience of the *Diku*, and similarly, in the same reciprocal vein, considering the *Diku* responsible for all his sorrows helps the tribal rationalize and justify his own weakness.

V

Discussion

The concept of out-group implied in the term *Diku* with all its unfavourable notions and feelings towards the in-group is universal : 'Every tribe and nationality, in some part of the world, every valley or cluster of hamlets, refer to itself in favourable terms and to others unfavourably' (Redfield 1961 : 70). This universal sentiment towards the in-group has been elaborated in detail by Cooley in his concept of the 'primary group' (Cooley 1923) and by Sumner in the definition of ethnocentrism—'that view of things in which one's group is the center of everything, and all others are scaled and rated with reference to it' (Sumner 1907 : 12-15).

Apart from the general category of out-group, the notion of *Diku* is of special significance in the Indian context in that the concept sets particular tribes virtually apart from the totality of the Hindu-dominated Indian civilization. This special feature stands out in qualitative contrast to the situation of the Hindu peasantry. The Hindu peasants of Assam Valley, for example, in a particular phase of social tension, may feel themselves apart from the Bengali neighbours or intruders, but these same peasants are connected with the totality of Indian civilization is so many varied ways that they cannot afford to feel alienated from the totality of the Hindu world. In the Chotanagpur tribal context, the entire Hindu world outside

Chotanagpur appears to sections of the tribals to be the world of the *Diku*, of the 'foreigners'.

Apart from sharing the general universal notion of negatively stereotyped out-group, the Mundari-speaking tribes of Chotanagpur also preserve an essentially primitive trait of referring to their own people as 'human being'—Munda (Horo), Santal (Hor), Hos (Ho)*. 'Many primitive tribes reserve the term for 'people' or 'human beings' to themselves alone while everywhere the term used to refer to neighbouring peoples are contemptuous, derogatory' (Redfield 1961 : 70). But referring to their own people as 'human beings','men' or 'tribesmen' does not necessarily mean, as Gillin and Gillin suggest, that 'all other human beings are something else than human' (Gillin and Gillin 1948 : 213, Sinha 1957 : 35 ; 1959 : 306). Although the terminology gives some indications in this direction, the concept of 'non-men' or 'something less than human' does not get support from our field-data in Chotanagpur. The term *Diku* does not seem to deny 'humanness' of the out-group, for he is occasionally referred as '*Diku-Horo*'. The *Diku* is basically an exogenous group, the foreigners, who threaten the socio-economic and cultural security of the tribal in-group.

From the historical perspective it appears that whereas the persistence of the term *Horo* is a case of linguistic lag from an archaic primitive historic phase, the concept of *Diku* is clearly associated with the mediaeval and later phase of historic experience of these tribal groups. The term *Diku* is associated with a Hindu landlord ; that is, with the introduction of the Jagirdary system in Chotanagpur around 1676 A.D. (Roy 1912 : 165). The new class of landlords and their servants who immigrated into Chotanagpur did not understand the language of the tribals, looked down upon them as barbarous jungle-dwellers, extracted rent and free labour, dispossessed many of them of their lands and exploited them in many other ways. It is not unlikely that these people were taken as a type by the

---

* Similar features are marked among tribes of other regions in India and abroad : Korku (Korku), Onge (Onge), Garo (Mande), Chang (Matmei), Gond (Koitur), Caribs (Karinye), Eskimos (In-nu), etc.

tribals and the whole range of upper-class Hindus were branded as belonging to this type, possessing these attributes and were labelled as *Dikus*.

The intensity of 'potential' fear and hatred against these outsiders is depicted in their various expressions in which the aliens, jagirdars or money-lenders are sometimes identified with a snake (*bing*), a witch (*najom*) or a man-eater (*kula*) (Singh 1965 : 190). However, as has already been pointed out, it should not be implied that a field-observer in Chotanagpur, taking his cue from the above stereotyped lexicons, will find the tribals seething in hatred against the *Dikus*. He will rather find local Hindu traders and land-holders mentioned as *Diku* as a mere 'nominational' category without much negative affect. It is also to be noted that all the Mundari tribes or all sections of these tribes, are not equally involved in the negative stereotype implied in the term *Diku*.

The Hinduized Munda of Tamar, for example, do not regard the local Brahmans or Vaishnavas as *Dikus* with negative connotation. This is specially so for the aristrocratic strata of the tribe, such as the Munda Thakur of Mardhan, who have been seeking not only Hindu identification but also recognition as Rajput Kshatriya. For such status-striving the association of the critically significant upper castes, such as the Brahman and the Vaishnava are essential. If one moves farther to the east of this region into the former Manbhum District where the Munda-derived Bhumij have completely lost the Mundari language in favour of Bengali and are virtually regarded as a Hindu caste, even the term *Diku* or its equivalent is absent in their vocabulary (Sinha 1957, 1962, 1965). Like the Munda of Ranchi the Bhumij do regard themselves as the autochthones whose ancestors had cleared primaeval forests of the region, but they do not label themselves as 'men' as against other ethnic groups. As in the case of the Munda, the Bhumij too regard certain other tribal groups and numerically small and poor artisan castes, who have been residents of the region for many generations, as their close associates. But the entire range of the world of the Hindu

upper castes are not *Diku* to them. They employ the upper-caste Brahman and Vaishnavas in their social rites and, as such, do not regard these groups beyond their circle of social intimacy.

Another direction of social and cultural emulation for the Bhumij is the Rajput-Kshatriya, ideally represented by the Raja of the Pargana. The rest of the upper-caste Hindus, however, are lumped under the category 'Bengali', whom the Bhumij wish to emulate but about whom they are also suspicious and bear some negative stereotypes. The various Hindi-speaking castes (labelled as Biharis) and the Moslems (except the weaver Jolha) and the few Europeans are regarded as even more remote from the world of the Bhumij than the 'Bengali'. It will thus be apparent that the Bhumij do mantain a distinction between the indigens and the outsiders (Bengali, Bihari etc.) but they do not label the in-group as '*Horo*' (men) nor is the entire Hindu social system lumped as a single category of *Diku* or foreigners. The Bhumij clearly represent an evolved phase of expansion of the tribal experience in Middle India in which the tribe has been virtually converted into Hindu peasantry and social and cultural identification has been broadened beyond their own tribal group to the multi-caste *pargana* and even beyond, to the Hindu universe (Sinha 1965).

Taking into account the various notions of the *Diku*, one gets the impression that the Chotanagpur tribals have an ambivalent attitude about the *Diku*. The *Diku* is hated and feared as well as admired. Writing about the Santal, Martin Orans states : 'The Santal themselves say that "the *diku* are big and knowing people" and their demeanour as they interact with Hindus, particularly of high caste, confirms acceptance in fair measure of their inferior status. Even today, in a period of renewed solidarity, the Santal are striving to "raise themselves" to the level of the "*diku*", as they say. The term "*diku*" is, of course, evidence enough of the ambivalence of the concession, and the history of Santal-Hindu relations has provided the Santals with sufficient reason to hate and fear as well as admire their Hindu neighbours' (Orans 1963 : 124).

It has been pointed out before that the castes over which the tribals have social and economic control are not *Dikus* to them. The low castes, because of their socio-economic position, have conceded rank to the locally dominant tribes, at least socially, if not psychologically, and have, to a great extent, done away with their cultural distinctiveness. Commenting on the Mundas' attitude towards these castes during the Birsa Movement, Singh says : 'a major factor of the movement was the absence of an attack on or any bitterness of feelings against certain non-tribal elements socially and economically sub-ordinate to the Munda. The Munda did not look upon the communities performing economically and socially necessary functions within their socio-political control as Dikus' (Singh 1965 : 195).

As the antagonism implied in the term *Diku* is directed towards the high castes who form an economic stratum, it is hard to distinguish ethnic conflict from the class conflict. But it can be said that as the conflict is not directed towards low castes who are also of different ethnic origin its seems more to be a class conflict. The Raja, with all his socio-economic power and recognition as a Hindu Rajput Kshtriya, is an exception. His ancestry is mythologically associated with Munda parents (Roy 1912 : 136-140). He is neither considered *Diku* nor of the tribal stock, but simply as Raja. His role is so deeply interwoven into the tribal fabric and moral order that none can think of him as a *Diku*. The same holds true about the Raja of Tamar, as also about the Hinduized Munda chieftains, the Mankis and Thakurs, of Tamar Pargana.

It has been observed that during an absence of conflict or tensions the *Diku's* image is not so much loaded with emotional prejudices as it is during the time of stress such as Santal Rebellion, Birsa Movement, or during the modern election campaign on behalf of the Jharkhand Party. From our interview of the educated tribals it appears that, apart from the spontaneous prejuduce of the tribal masses implied in the concept of *Diku*, there is a self-conscious effort at rationalizing and crystalizing the negative image of the *Diku* in support of the Jharkhand Movement. In their new solidarity-drive these

leaders have a vested interest not only in emphasizing the separateness of the *Diku* but also in the archaic intra-tribal identity as men (*Horo*, *Ho* etc.), in favour of a generic *Adivasi*.

Our observations stretching over the Munda, Ho, Bhumij and the Santal tribes provide evidences of two phases of historic experience of these tribes.

In one, the tribes have been slowly drawn into a regional identification as peasants of a pargana through economic symbiosis with the Hindu castes and the emergence of local tribal-derived or Hindu-initiated chieftaincies and kingdoms (*e.g.* Ratu, Tamar, Barabhum etc.). Identification with the Hindu world has been achieved through these stable regional capsules, with their own upper strata forming the link with the larger Hindu society beyond the region. The other model refers to a different ecological situation and historic phase in which relatively isolated tribes have been rapidly exposed to powerful immigrants who are not morally attuned to the region. This has often led to rapid economic and socio-cultural deprivation of the indigens and generated overt conflict or latent prejudice. It is not for nothing that these prejudices gained momentum precisely during British rule, when immigrants started coming in in large numbers, often dispossessing the tribals of their ancestral land, taking advantage of the contractual law introduced by the British Government.

It is thus important to note that when we look into the meaning of the term *Diku* in Hoffmann's and Bödding's dictionaries mentioned above, they mainly refer to a relatively recent (post-mediaeval ?) phase of historical experience of the tribals of Chotanagpur. Unlike the more Hinduized Bhumij of Manbhum, the tribals of Chotanagpur uplands and plateaux have been exposed to modern economic, legal and political processes without completing the phase of integration with the regional capsule of Indian civilization.

Acknowledgement

We are grateful to Dr. D. K. Sen, Director, Anthropological Survey of India for kindly permitting us to undertake this research project and also to publish this in *Man in India*.

REFERENCES

Bodding, P. O. 1934 : *A Santal Dictionary*, Vol. II. Oslo.

Cooley, C. H. 1923 : *Social Organization*, New York.

Datta-Majumder, N. 1955 : *The Santal*, Calcutta.

Ghurye, G. S. 1963 : *The Scheduled Tribes*, Bombay.

Gillin, J. L. and J. P. Gillin 1948 : *Cultural Sociology*, New York.

Grierson, G. A. 1906 : *Linguistic Survey of India*, Vol. IV, Calcutta.

Hoffmann, Rev. J. 1950 : *Encyclopaedia Mundarica*, Vol. IV, Patna.

Hunter, W. W. 1868 : *The Annals of Rural Bengal*, London.

Majumdar, D. N. 1950 : *Affairs of a Tribe*, Lucknow.

O'Malley, L. S. S. 1910 : *Bengal District Gazetteers* : Vols. 20 and 21, Calcutta.

Orans, Martin 1965 : *The Santal : a Tribe in search of a Great Tradition*. Detroit.

Redfield, R. 1961 : 'How Human Society Operates' in *Society Today and Tomorrow*. New York.

1912 : *Mundas and their Country*, Calcutta.

Roy, S. C. 1915 : *The Oraons of Chota Nagpur*. *Ranchi*.

Russel, R. V. 1907 : *Central Provinces District Gazetteer*, Chhindwara. Bombay.

Singh, S. 1966 : *The Dust Storm and Hanging Mist*, Calcutta.

Sinha, S. C. 1957 : 'The Media and Nature of Hindu-Bhumij Interaction', *Journal of The Asiatic Society, Letters and Science*, Vol. 23, No. 1, 1957, pp. 23-37.

1958 : 'Tribal Cultures of Peninsular India as a Dimension of Little Tradition in the Study of Indian Civilization : a Preliminary Statement', *Jour. of Am. Folklore*, Vol. 71, No. 281, pp. 504-518.

1962 : 'State Formation and Rajput Myth in Tribal Central India', *Man in India*, Vol. 42, No. 1, pp. 35 80.

1965 : 'Tribe-Caste and tribe-peasant continua in Central India,' *Man in India*, Vol. 45, No. 1, pp. 57-83.

Sumner, W. G. 1940 (1907) : *Folkways ; a Study of the Sociological Importance of Usages, Manners, Custom, Mores and Moral*, New York.

'PROFESSIONAL PRIMITIVES': HUNTERS AND GATHERERS OF NUCLEAR SOUTH ASIA

RICHARD G. FOX

(*Received on 6 November 1969*)

THE anthropological treatment of tribal India[1] has often been in terms of long-standing ethnological concepts about primitive society in general. This viewpoint is especially noticeable in much of the research on South Asian hunters-and-gatherers. Many such studies contain the intrinsic assumption that these Indian groups are basically similar to primitive hunting and gathering societies in other parts of the world. Sometimes, this assumption is made within the framework of antique cultural evolutionism. Thus, South Asian hunters-and-gatherers have been used as examples of a stage of human social evolution at only short remove from savagery (Ehrenfels : 4). Sometimes, this assumption is phrased in the more modern style of cultural ecology. In this vein, Majumdar regards South Asian hunters-and-gatherers as examples of the

---

* The author is Associate Professor in the Department of Sociology and Anthropology at the Duke University, Durham, North Carolina, 27706 U.S.A.

The author has very ably shown that the 'economic specialization of several hunting and gathering tribes of India' is probably a comparatively recent development. This apparently followed their contact with neighbouring peasants, and should not be treated as a 'survival' from the past.

The idea that nomadic communities like the Birhor became specialists in some industries based on jungle-produce *after* their contact with peasants of the neighbouring villages, and thus became *something like a caste*, was hinted at by the present Editor in 'Some observations on nomadic castes of India', *Man in India*, 1956, Vol. 36, No. 1. The article has been reprinted in his *Culture and Society in India* (Asia Publishing House, Bombay, 1967, pp. 169-173.)

The same opinion has been expressed by Surajit Sinha in 'Urgent Problems for Research in Social and Cultural Anthropology in India : Perspective and Suggestions', *Sociological Bulletin*, Vol. XVII, No. 2. September, 1968, p. 125.

articulation of a primitive technology and food quest with the environment (Majumdar : 123 ff.). However, both viewpoints share a belief in the 'primitiveness' of these social groups and their economic and social life-ways.

A most forceful recent statement of this point of view comes from D. D. Kosambi. He writes in *Scientific American* :

> ...there exist in India today many tribal peoples whose customs go back to preliterate times. Representing some 30 million...of India's total population of 440 million, these people preserve many features—in fossilized form as it were—of Indian prehistory (Kosambi : 105).[3]

Yet is there justification for seeing Indian hunters-and-gatherers as cultural left-overs or fossils from pre-literate times ? Or, to set aside the evolutionary perspective for an ecologically functionalist one : are Indian hunting and gathering groups similar in economic and social structure to primitive societies in Australia or the New World ? It is the hypothesis of this paper that in important facets of economic and social organization, they are *not*—and that a re-interpretation of their position *vis-a-vis* the larger Indian society will clarify the reasons for their existence and persistence on the Indian scene. This paper aims at a wider significance as well : the data to be presented will hopefully clarify the way in which marginal geographical locales and their populations become enclaved in and exploited by a pre-industrial high civilization.

I

As a preliminary to the re-evaluation of South Asian hunting-and-gathering groups, one of the primary stumbling blocks found in earlier studies must be removed. Where research on Indian hunters-and-gatherers has been faulty is in ignoring the sociological environment of these groups. By 'sociological environment' is meant the total of social or cultural forces impinging on a group or community. Studies of Indian hunters-and-gatherers often have much detail on the physical ecology of these societies. But it is not enough to

know the natural terrain or the flora and fauna surrounding such a 'tribe'. One must also know the social terrain—who are its neighbours, what is their level of social complexity, and what is the connexion or interaction between the groups (cf. Sahlins : 323).

Several important re-interpretations of hunters-and-gatherers in South Asia emerge from this theoretical perspective. I state them in preliminary fashion directly below. The ethnographic data which have led to these conclusions are presented in part II of this paper.

1. Indian hunting-and-gathering groups live in supposedly remote hill or forest areas. In fact, however, their location is usually close to the villages of agricultural tribes or Hindu castes. The spatial separation of hunters-and-gatherers from Hindu culture and society has been exaggerated, perhaps as a reflection of the ethnographers' desire to find truly primitive peoples in the sub-continent.

2. Rather than being independent, primitive fossils, Indian hunters-and-gatherers represent occupationally specialized productive units similar to caste groups such as Carpenters, Shepherds, or Leather-workers. Their economic regimen is geared to trade and exchange with the more complex agricultural and caste communities within whose orbit they live. Hunting and gathering in the Indian context is not an economic response to a total, undifferentiated environment. Rather, it is a highly specialized and selective orientation to the natural situation : where forest goods are collected and valued primarily for external barter or trade, and where necessary subsistence or ceremonial items—such as iron tools, rice, arrow-heads, etc.—are only obtainable in this way. Far from depending wholly on the forest for their own direct subsistence, the Indian hunters-and-gatherers are highly specialized exploiters of a marginal terrrain from which they supply the larger society with desirable, but otherwise unobtainable, forest items such as honey, wax, rope and twine, baskets, and monkey and deer meat. Unlike the Australian aborigines or the Paiutes, their economic process and well-being are dependent on the barter of these items for the crops and crafts of

their more complexly organized plainsmen neighbours. The economic activity of Indian hunting-and-gathering groups is more akin to the specialization of caste hereditary occupation, than it is to the generalized environmental response of the Australian or Paiute.

As a corollary, when such specialized collection of forest produce is no longer economically rewarding, the group will revert to some other form of less specialized economic activity, such as agriculture or herding, They will not revert, be it noted, to *pure* hunting and gathering, which only 'pays' to maintain as an occupational specialization when it produces goods valued by the larger society.

3. The collection of forest products for external barter or exchange has various effects on the internal social organization of South Asian hunters-and-gatherers. In such groups it is commonly observed that the single (nuclear) family functions as the prime economic unit. This situation seems to be a product of the individually competitive economic system where each family tries to maximize the amount of forest goods collected for external transactions. Further, the equally prevalent pattern of highly migratory individuals, the lack of any formal kin pattern to the composition of settlements, and the lack of extensive reciprocity and sharing among family groups (a basic form of social cohesion among other *primitive* hunters and gatherers) are also consonant with the fragmentation of the society into individually competitive economic units, each geared to external trade or exchange.[8]

This presentation, I believe, makes better sense of the peculiar position of hunters-and-gatherers in South Asia. From this perspective, Indian hunting-and-gathering groups are viewed as marginal economic specialists for traditional Indian civilization. As a result of this role, their external interaction must be seen as economic enclavement within the larger society. This same enclavement mandates important internal social modifications. That is, the social organization of these groups is transformed to meet the expectation of collection and exchange with the outside world. This viewpoint fits Indian hunters-and-gatherers into a general social

framework identifiable as the type process of Indian civilization : the localization within bounded kinship or 'ethnic' groups of occupational and craft specializations (cf. Weber : 66, concept of 'guest' tribes).

In part II of this paper, five hunting and gathering groups are used to substantiate the above argument. They are : the Kadar, Birhor, Chenchu, Vedda, and Nayadi. Many other hunting and gathering 'tribes' are reported in the literature, but data on them tend to be spotty or fragmented, and more concerned with exotic rituals and beliefs than economic institutions or social structure. Even the re-interpretation of the five groups named above is made more difficult by the general assumption of 'primitiveness' on the part of their ethnographers, and the lack of historical depth in their presentations. Nevertheless, a detailed inspection of the material casts in grave doubt any conception of these groups as primitive tribal hunting and gathering societies.

II

KADAR

Social ecology : The Kadar are found in the jungly hills of the Western Ghats in the former State of Cochin (now part of Kerala). At the present, Ehrenfels reports the Kadar as being clamorous for plains rice and ornaments to the perversion, for him at least, of their former 'aboriginality'. He maintains that previous exchange between the Kadar and the plains was limited to trade in jungle knives, salt, and pottery, and that it was infrequent. However, since his belief is that 'Kadan life . was still a tangible survival of an early, food-gathering civilization in India' (Ehrenfels : 4), his historical reconstruction is certainly not unbiased. Undoubtedly, the frequency of contact between Kadar and the outside has increased greatly since exploitation of the forests was leased to outside contractors. The latter built mechanized tram lines running into the hills about 1900, and employed Kadars as wage-labourers. However, the changes of the last century should not be allowed to obscure the other

evidence which indicates a long history of patterned economic and political interaction between Kadars and the State of Cochin.

Early reports on the Kadar, as quoted by Ehrenfels, note their periodic visits to Tripura in order to exchange their jungle products for goods from the plains: '...trapped elephants, "wild honey", cardamom, and other jungle products were occasionally brought down to the court of the Maharaja of Cochin...which the Kadar, along with others among their aboriginal neighbours, seem to have acknowledged as the centre of the world...' (Ehrenfels : 17). The Kadar are said to be vassals of the Raja, who gave them clothing and other presents when they acted as his guides through the jungle (Ehrenfels : 11). Ehrenfels documents the extent of Kadar dependency on the outside, their desire for rice, chillies, and opium which they can only obtain from the plains. He feels, however, that this situation is recent, a result of the forest contractors and of Kadar abandonment of various jungle roots as their food staple. Yet the Kadar have for many centuries depended on the plains for iron implements —a technological item not produced by themselves, and without which they cannot effectively exploit their forest environment. Why then should iron have been known for many years, and yet a taste for rice and chillies develop only in the last half-century? The forest contractors had indeed broken down traditional Kadar society—but not from a level of aboriginality of the sort Ehrenfels imagines. The forest contractors merely replaced the Kadar labour-intensive and 'tribally'-defined exploitation of the forest with a mechanized and capitalist forest exploitation system.

Social organization : Ehrenfels reports that individual ownership of communally collected goods is not acknowledged. However, forest produce which is collected singly gives an individual a right of ownership and profit over such goods (Ehrenfels : 49). This individualization of externally-destined commodities extends into concepts of land tenure: 'The forests around a village are, by the villagers themselves, divided for the collection of the minor forest produce, and

any encroachment of a member of the tribe upon the division allotted to another is never met with on the belief that the offended man will bring about the complete ruin of the offender through the intervention of his ancestors' (Iyer : 36).

Few institutions exist in Kadar society which merge the individual into larger social groups. Individual mobility is rampant, and the population of a locality changes constantly. Even within what Ehrenfels designates the 'family', membership is in constant flux. Larger kin groupings perform few if any economic or behavioural functions, and there are not even clan or family names (Ehrenfels: 127-128). Just as the individualistic ethic of the Kadar is reflected in their concepts of land tenure and commodity ownership, so too is it in the absence of important social institutions beyond the single person. Both conditions, it is hypothesized, reflect the internal fragmentation of the social unit brought on by the adaptation to external trade and an external social system.

BIRHOR*

Social ecology : The Birhors live in the hills and jungles of the eastern and north-eastern Chotanagpur plateau. This 'tribe' resides in close proximity to agricultural villages, and the ethnographer, Roy, clearly documents the nature of Birhor acculturation to their neighbours. These agricultural villages lie in the open valleys near to the Birhor hills and are 'sparsely inhabited by...tribes and castes on a higher level of culture' (Roy : 40). The Birhors are heavily dependent on the exchange of forest products with the outside. Dalton writes :

> The Birhors...subsist on wild animals, honey, and what they can obtain by the exchange of jungle produce with people of the plains...They sell Chob, a strong fibre of which ropes and strings for various

* Editor's note : Three more accounts of the Birhor may be referred to in this connexion. Sen, B. K. Notes on the Birhor. *Man in India*, Vol. 35, No. 2, 1955 ; Sen, B. K. and Jyoti Sen, Notes on the Birhors. *Man in India*, Vol. 35, No. 3, 1955 ; Sen, Jyoti, Ethnographic Notes on the Birhor, *Bulletin of the Anthropological Survey of India*, Vol. XIV, Nos. 1-2. Pp. 45—58.

> purposes are made, honey, wax, and sikas, the sticks like bows for carrying loads... (Dalton quoted in Roy : 25).

The Birhors also sell or barter monkey skins which are made into drum-heads. In turn, they depend on the plains for rice, salt, and oil as well as cattle, goats and other animals when they are needed for sacrifice (Roy : 25).

Roy clearly documents the extent of Birhor external contact and dependency :

> ...in order to sell their humble manufactures of wood and rope-fibres, and to buy their scanty clothing and tinsel ornaments, their iron tools and weapons, their earthen pots and such humble condiments as salt and pepper, all Birhors...necessarily come in contact with other tribes and castes...And in the rainy months their women often work in the neighbouring villages as field-labourers (Roy : 57).

Some of the more settled Birhors have ceremonial friendship with men of other castes, and Roy believes that the influence of this contact on Birhor 'manners, customs, beliefs and practices' is profound (Roy : 57).

Roy observed that the specialized economic pattern of this 'tribe', particularly *chop*-fibre collection as a main industry, was something more than a purely environmentally determined response. He explained it as in part the result of a hereditary, innate predilection (Roy : 543). However, might it not better be seen as an elaborated occupational specialization similar to the artisan specialities performed by Indian castes ?

Social organization : The Birhors move about in groups of 3 to 10 families called *tandas*. The collection of *chop* and its manufacture into rope, string, and nettings as well as the gathering of herbs, tubers, honey, and bees-wax are not activities of the whole *tanda*. Instead, these are matters for individual families—for their own use or 'for sale or barter for their [own] benefit' (Roy : 69). It is interesting that the only economic activity undertaken by the whole *tanda* as a

unit is that of monkey hunting. Monkey meat is a main subsistence good derived directly from the forest, which need not be converted into a usable commodity through barter or trade (Roy : 69). Thus, the absence of large-scale co-operative social units only occurs with regard to externally-destined commodities, not subsistence ones. The 'subsistence' economy here is socially bifurcated from the 'market' economy.

In the same pattern, Birhor clans have little or no functions other than marriage regulation, and *tanda* membership is not necessarily kin-based and is in a state of flux (Roy : 90, 546).

In the above two 'tribes', sections of them have recently taken to various forms of slash-and-burn agriculture or agricultural wage labour. Although the circumstances are poorly reported, these groups are evidently reacting to the British leasing of the forest and their exploitation to outside contractors. The economic basis of tribal forest trade is taken away ; the hunters-and-gatherers are forced to give up their former specialization for a more generalized agricultural one. They thus move closer to a purely subsistence-directed economy than they had previously. This point will be brought out further in the following consideration of the Chenchus.

CHENCHU

Social ecology : The Chenchus live on the Amrabad plateau in the Nallamalai Hills of the former princely state of Hyderabad and in adjoining areas of the former Madras Presidency. Furer-Haimendorf's study of these people is much superior to the ethnographies previously discussed and permits a more detailed validation of this paper's hypothesis (despite the fact that Furer-Haimendorf himself sees the Chenchus as primitive hunters-and-gatherers).

That the Chenchus have been in long-standing interaction with the plains is pointed to by much evidence. The Chenchus have clearly not been isolated from such contact by inaccessibility or lack of communications. The inferior quality of the soil on the plateau has kept cultivators out, and left the area a residential refuge for specialized hunting and gathering.

Yet from about the 7th century A.D. the presence of a famous Shiva temple (Sri Sailam) in these hills counteracted isolation and brought the area into constant interaction with plains Hindu society. Furer-Haimendorf writes, 'From these early times, pilgrims from the whole of the northern Deccan passed through the forest of the Amrabad plateau on their way to the annual festivals at the famous temple' (Furer-Haimendorf: 15). Various other ancient ruins atop the plateau attest to the linkage with a larger world throughout the past.

Chenchu economic behaviour was in good measure geared to the exchange of forest produce with the plains. This 'tribe' collected honey, wax, fruit, *mohua* flowers (for liquor distillation), and made baskets—all for external trade. In return, they received rice, ax-heads, clothing and arrow-heads. Furer-Haimendorf notes the necessity of the bazaar or trader as a supplier of essential goods for Chenchu society (Furer-Haimendorf: 79-81). Chenchus also act as guides and coolies for pilgrims to the Shiva temple, and in recent years, have sold them milk from their own livestock.

In the twentieth century, the Hyderabad State enacted forest legislation and leased forest exploitation to outside contractors. The Chenchus, their occupational monopoly broken, did not have as lucrative a trade as formerly. Indeed they complained that in their grandfathers' time prices and conditions were much better. The situation is worsened because the forest contractors introduced new consumption ideas into the Chenchu population at the very time they cut away the old source of money income through external trade. As a result, the Chenchus have turned to agriculture and livestock-raising as alternative economic pursuits (Furer-Haimendorf: 79). This change in livelihood pattern as well as their valuation of the trade of the past reflect the former Chenchu orientation to an external consumption market.

Social organization : The Chenchus illustrate very well the fragmentation of internal social solidarity and co-operation brought on by externally directed economic behaviour. Furer-Haimendorf notes,

> The absence of concerted action is another important characteristic of Chenchu economics......in collecting roots or fruits, individuals working side by side, do not co-operate ; each fills a separate basket and each carries his basket back to his own house to be consumed by his own family (Furer-Haimendorf : 58).

This same lack of co-operation is also true of hunting. Furer-Haimendorf sees this individualism as characterizing not only the collection of economic goods but also their internal distribution :

> Although a certain measure of barter and trade must have been maintained with outsiders for some considerable time......Chenchus never barter among themselves. Economically perhaps more than socially, the family is a self-contained unit......(Furer-Haimendorf : 59).

Furer-Haimendorf notes how this picture of Chenchu economics differs from the usual pattern among primitive hunters-and-gatherers, although he does not suggest why this might be so.

The concept of private ownership of subsistence and trade commodities is highly developed among the Chenchus. Any item obtained by the individual through his own actions becomes his private property, to be disposed of as he alone decides. Proprietorship of this sort is enjoyed by women and children too (Furer-Haimendorf : 163).

The same elasticity of community organization found in Kadar and Birhor society exists among the Chenchus : '......the economic independence of the individual family is correlated to its status as a self-contained social entity, free at any time to sever its connections with the village group' (Furer-Haimendorf : 59). Individuals also enjoy great mobility. Correspondingly, larger social groupings within Chenchu society are either weak or non-existent. Clan membership determines little beyond marriage regulation, and Chenchu clans lack any feelings of collective responsibility, lack clan elders or councils, have no ceremonial occasions or co-operation to strengthen their solidarity (Furer-Haimendorf :

94). Furer-Haimendorf was struck by how great a departure this was from the norm of hunting-and-gathering societies :

> ...the Chenchu is really not very interested in his clan...Clan-prestige, so strong a motive to social behaviour of many primitive races, is an empty conception to the Chenchu who does not consider himself in any way linked with the welfare or the strength of his clan (Furer-Haimendorf : 94).

Again, Furer-Haimendorf offers no explanation for this anomaly. However, we can recognize here the fissioning of the important social units of the society into independent familial groups geared to external trade or barter.

VEDDA

Social ecology : The Veddas are found along the eastern slopes of the central mountain chain of Ceylon. The Vedda hills have been an important religious migration point for many centuries, and this locale has never been closed off to influences emanating from the major centres of Sinhalese culture. The Veddas display the same sort of economic specialization in marketable forest-produce collection as the other groups discussed above. However, the historical sources available for this 'tribe' indicate that the economic interaction between Vedda and neighbouring agriculturalist is of long standing and is not a recent phenomenon (as Ehrenfels argues for the Kadar). There is seemingly no reason why the historical depth of the Vedda situation need not also apply to the Birhors, Chenchus, and Kadar.

Robert Knox, who was held in captivity in Ceylon for 20 years, wrote in 1681 of two types of Veddas—'wild' and 'tame.' Of the wild Veddas, he notes that 'They kill *deer* ...and the people of the countrey come and buy it of them' (quoted in Seligmann and Seligmann : 6). They also traded elephant teeth, honey, and wax to the king's officers in return for arrows and cloth (similar to the clientship of the Kadar with the Maharaja of Cochin ?). There is mention in Knox's book of a 'silent trade' with smiths, wherein deer meat was traded for arrow-heads. Knox reported that the tamer Veddas

came to buy and sell among the people (Seligmann and Seligmann : 7). Many centuries before, a Theban traveller of the 4th century A.D. wrote of Veddas from whom he obtained pepper (Seligmann and Seligmann : 420). It seems clear then that Vedda trade with the outside is not of recent origin, but rather represents a traditional aspect of their social life.

However, by the time the Seligmanns studied them, most of the Veddas had given up their hunting and gathering specialization for agricultural pursuits. Few families remained who persisted in their supposed 'aboriginal' manner. But the Veddas had not completely lost their 'commercial' orientation to an external market. They no longer transacted in jungle produce ; instead they dealt in their own supposed 'primitiveness' which they displayed as they might any other jungle commodity, that is, for a price :

> The Veddas have long been regarded as a curiosity in Ceylon...hence Europeans go to the nearest Rest House on the main road and have the Danigala Veddas brought to them...The white man appeared to be immensely anxious to see a true Vedda, a wild man of the woods, clad only in a scanty loin cloth, carrying his bow and arrows on which he depended for his subsistence, simple and untrained, indeed, little removed from the very animals he hunted. What more easy than to produce him ? The Nilgala headman sends word when strangers are expected, then the Veddas repair to their very striking hut on the rock dome...These folk, who when we saw them wore their Vedda loin cloths and were smeared with ashes, are reported to wear ordinary Sinhalese clothes when not in their professional pose...their pose of poverty interests strangers and procures them visitors, whose generosity is the greater the more primitive their mode of life appears to be (Seligmann and Seligmann : 39).

The Veddas seem to have engaged in this profit from being primitive as early as 1863 when an earlier investigator noted

that they were often brought before visitors and that they showed no contempt for money thus earned (Seligmann and Seligmann : 40).

The Seligmanns were good enough observers to see that many Veddas had 'learnt to play the part of professional primitive man'. Yet they still believed that some time in the uncorrupted past, Veddas were aborginal hunters-and-gatherers at a very low level of culture. However, Knox's account indicates that three centuries before, the Veddas were tied in important ways to an external economy and external political institutions. In this sense, then, the Veddas have always been 'professional' primitives, and have always been tuned into the social and economic demands of the larger society. It is only a strange compounding of the anthropologists' desire to find truly primitive peoples in the sub-continent with the studied 'aboriginality' of the hunters-and-gatherers themselves which has obscured this fact.[4]

NAYADI

Social ecology : The Nayadis live in the southern sections of the former Malabar district and in the north of Cochin State (both presently parts of Kerala). They indicate how thin a line separates plains outcaste from jungle hunting-and-gathering tribe. The Nayadis are commonly regarded as a caste, mainly because they reside within the non-nucleated multi-caste settlements along the Malabar coast. Yet in physical type and actual ancestry, they are closely related to the Paniyans and other hunting and gathering hill peoples found in the Western Ghats. It is only recently that the Nayadis have come down from the hill jungles, and their mode of existence still reflects a dependency on the produce of the forest for sale or barter. Their change from so-called primitive hunting and gathering tribe to pariah caste was brought about merely by a change in residence, not a change in occupation or subsistence technique. This is because the specialized, externally-oriented hunting and gathering of the 'tribe' serves just as well as an occupational specialization for the caste.

Several hundred years ago, when the Nayadis still inhabited

the jungle hills, they seem to have been employed as game beaters (Aiyappan : 10-12). Traditionally such hunting was organized by the local Nayar chieftain as a favourite sport. The customary distribution of game allocates a hindquarter to such a local chief (Aiyappan : 47, 49). In the ethnographic present, most Nayadis were reduced to begging as the primary subsistence technique, and most of them carried this activity on in the coastal plain. But certain special Nayadi industries remained which were derived from forest products, and which were probably involved in a traditional system of exchange with the plains before these people were forced out of the hills. Nayadis make draw-ropes for wells, collar-ropes for cattle, slings, knitted ball toys, rope-net bags, and rope-leashes for hunting dogs. They also collect medicinal plants from the jungle for sale, and make incense from resin. They supply the plains villagers with various tree-barks used as soaps (Aiyappan : 26). This latter commodity reflects not only the very long duration of Nayadi-plains exchange, but also underlines the necessity of Nayadi products for the coastal people.

In the last several centuries, the Nayadis have been pushed out of the jungles by the encroachment of cultivators. Aiyappan writes :

> The rise in prices of agricultural produce since the introduction of India into the world market, after the coming of the British, led to every inch of land being brought under cultivation for commercial crops, and the very rapid growth of population made people encroach more and more on the forests...More and more men from the plains moved eastward to the newly cleared areas displacing the original population. Thus came the Nayadis to live among the plains castes (Aiyappan : 3).

The Nayadis were not dislodged by capitalist competitors who more efficiently and in more mechanized fashion exploited the forest. They could not therefore turn to agriculture as the profits from the jungle dried up—as had Chenchus, Veddas, and Birhors. The good agricultural land had already been occupied by higher castes ; the Nayadis

could only turn to the plains and begging, and what little could be gained from increasingly marginal forest collection. They became a caste in terms of residence by retaining as far as possible the forest-occupational specialization which had served them when they were a hill 'tribe'.

Social organization : The Nayadis display the same individual proprietary mentality characteristic of the other groups discussed above. That this syndrome and institution should exist both among people called an inferior caste and others called primitive tribes indicates how little difference exists between such tribes and castes in the Indian context. Among the Nayadi, each family has its own circumscribed area for begging which is clearly delimited territorially. Such locality rights may be sold or mortgaged. Aiyappan remarks the similarity of Nayadi proprietary practices with those of 'beggar tribes' in Mysore. He makes it clear that in this respect, the Nayadi caste differs little from 'primitive' hunting-and-gathering tribes :

> The development of some degree of private ownership among the jungle tribes begins with the division of hunting and collecting areas, and...such division characterizes even the most primitive of the tribes. (Aiyappan : 29).

Conclusion

This paper has re-interpreted Indian hunters-and-gatherers as marginal economic specialists for traditional Indian civilization. The particular kind of hunting and gathering they do is not a complete utilization of all resources for subsistence provided by the environment, but rather a selective exploitation aimed at the gathering of materials which are exchangeable or saleable to their agricultural neighbours. Indian hunters-and-gatherers generally live in close proximity to plains plough-agriculturalists and caste villages, and they depend heavily on the latter's crafts and produce for survival. In many ways these so-called 'tribes' resemble the castes of artisans such as Carpenter or Blacksmith resident in Hindu villages. Although they are not residentially enclaved as are

these castes, Indian hunters-and-gatherers are economically, and therefore to a large extent socially, enclaved within the stratified society of plains villages and Hindu civilization. This enclavement is also mirrored in particular aspects of their internal social structure, such as family and kin organization.

This study hopefully illustrates an important aspect of traditional Indian civilization which may be true of other pre-industrial agrarian societies : that is, the enclavement of groups which exploit a marginal environment by techniques and a style of life radically different from the general pattern of the society. Such marginal enclaves seemingly persist because the larger society does not have the technology to exploit this environment in a more direct fashion.[5]

Anthropologists have traditionally been interested in the reaction of non-industrial tribal peoples to contact with an industrialized world. They have intensively surveyed the way in which tribal groups have accomodated themselves to the new economic, political, and ideological modifications brought on by colonialism and modernization. However, little attention has been given to a similar acculturative process which must have occurred often in the past : that is, the manner in which geographically marginal tribal peoples were absorbed, altered, and harnessed to the economy and society of technologically advanced pre-industrial civilizations. Acculturative pressures in a pre-industrial contact situation clearly lead to different results than similar pressures in an industrial contact situation. In the Indian case, such pressures lead to peripheral enclavement of populations exploiting a marginal terrain by marginal techniques (hunting and gathering). Historically, this situation may arise from the acculturation of formerly independent hunting and gathering tribes,[6] or by groups moving out from the larger society and occupying this niche. In the former case, foreign groups are acculturated into a limited symbiotic relationship with the larger society ; in the latter, groups are reconstituted so as to appear on the surface like primitive tribal societies.

Several anthropologists have tried to define these social situations more distinctly. Lehman has proposed the term 'subnuclear' (following Steward) to refer to a multitude of hill tribes in Southeastern Asia. By 'subnuclear', Lehman refers to 'cultures and societies that abut on a civilization... but are distinct from that nuclear culture and its society. They are not civilized, but neither are they primitive. The subnuclear society's adaptation to civilization is so complete that it is necessary to propose a categorical relationship between the two' (Lehman : 225). Lehman shows how the necessity of having to deal with plains Burman society importantly moulded the social structure of the northern Chin hill people. This interaction led to a ranked lineage system among the Chin in the north which reflected as well as intermediated the important trade contacts with lowland Burman society. The southern Chin, geographically closer to the plains, did not develop the same sophisticated social institutions because their trade connexions with Burman society were more direct (Lehman : 44).

Helms has attacked the theoretical issues of this problem more directly. She proposes a category of 'purchase' societies, which are neither peasant nor tribal, and which are heavily dependent on external social systems. She writes,

> Purchase society is articulated with the outside world through particular economic ties in such a way that definitive adaptations to the larger system result. Unlike peasantry, 'purchasers' are not enmeshed in state political controls, but operate instead on the economic frontiers that lie beyond such controls...In order to participate successfully in this wider economic network, all aspects of purchase society organization adapt in any number of ways so as to facilitate the formation of outside economic ties (Helms : 24).

Clearly Indian hunting-and-gathering societies must be seen from within the sort of theoretical framework proposed by Lehman and significantly advanced by Helms. However, the extent of their enclavement and dependency on Hindu agrarian society is much greater than that of the hill peoples

of Southeast Asia or other 'purchase' societies. Perhaps the difference lies in the greater territorial segregation of these groups completely within the Indian sub-continent, and the lack of any exit from the larger society's influences. The Southeast Asian hill peoples have always had barriers, both geographical and sociological, behind which to retreat. Indian hunters-and-gatherers, totally surrounded by plains agrarian society, had no further hills—either sociologically or geographically—to climb. Perhaps too, this difference reflects the nature of the agrarian civilizations themselves. It has often been remarked that Indian civilization throughout its history has been able to harness social units to itself without necessarily fully absorbing them.

Undoubtedly, the nature of tribal enclavement reflects both the organization of the agrarian society as well as the condition of the marginal groups. Here, Lattimore's concept of a 'frontier' cultural sphere would probably prove valuable (Lattimore ; 1662a : 238-242). For instance, a distinction might be drawn between an 'external' frontier (such as the nomadic periphery of traditional China) and an 'internal' frontier (such as the camel herders of the Near East).[7] The nature and impact of tribal enclavement under these differring frontier ecological situations would surely be dissimilar. An external frontier permits a choice between adaptation or moving away (from the civilized sphere) ; an internal frontier allows a more restricted choice between adaptation or complete absorption (into the civilized sphere). The hill tribes of Southeast Asia have always existed on an external frontier in terms of geography and the impact of agrarian society. The hunters-and-gatherers of nuclear South Asia have always been restricted territorially, have been more vulnerable to being economically stripped by the outside, and have more easily altered their subsistence and social patterns to fit the definitions of the larger society. Although they also exist on a 'frontier', it is highly circumscribed, surrounded and internal, and one which allows fewer escape routes from the penetration of plains agrarian society. Space does not permit a fuller exploration of this topic. At this point it is enough to insist

on a re-interpretation of Indian hunters-and-gatherers in terms of their enclavement in the larger society.

Because they remain unabsorbed, Indian hunters-and-gatherers can mistakenly be regarded as primitive tribes or 'fossils' when in fact they are intimately and irrevocably dependent on an advanced civilization. This lack of absorption cannot be explained either by historical accident or remoteness. Indian hunters-and-gatherers persisted until relatively recent times not because of their removal from Hindu society or their occupation of difficult terrain.[8] They persisted precisely because of their patterned interaction with the larger society; their continued existence in their niche depended on the maintenance of this interaction (and the survival of the pre-industrial civilization). In one sense, then, Indian hunters-and-gatherers are fossilized—not as examples of the pre-literate past, but as marginal, non-tribal, occupationally specialized social adjuncts of an agrarian state.

NOTES

[1] 'India' in this paper refers to the whole of the South Asia sub-continent. 'Nuclear' South Asia refers to areas in direct and long-standing interaction with Indian civilization. Thus, the hunters-and-gatheres of the Andaman Islands are excluded from this discussion.

[2] Kosambi goes on to suggest that much of traditional Hindu civilization such as caste originates from the expansion of northern iron-using peoples into southern India, inhabited by herders and hunters. That the recent archaeology on neolithic and chalcolithic times in the Deccan completely denies his fanciful idea does not seem to bother Kosambi. However, he does recognize that the so-called primitive tribes of India have for many centuries been in close contact with agrarian society. He does not explain why these 'tribes' remained unabsorbed except to say that there was plenty of food to go around (Kosambi 1967 : 105).

[8] Some of the above characteristics (absence of formal kin patterning to settlements, great internal mobility of persons, lack

of definite exogamic rule) have been noted by Service as characterizing a category of hunting and gathering societies he calls 'composite bands'. Service explains these institutions in such composite bands as brought about through depopulation from European colonialism and disease (Service : 108). However, populations of hunters-and-gatherers in nuclear South Asia do not seem to have suffered this sort of depopulation. The institutional similarity to composite bands must come from the equally fissiparous effects of their long-standing economic interaction with plains society.

4 No section is provided on the social organization of the Veddas. The combination of their almost complete absorption into Sinhalese society and the deficiencies of the ethnography itself make the comprehension of Vedda social organization extremely difficult (cf. Leach, *passim*).

5 It is only with the introduction of a new technology after British domination that the forest becomes exploitable by plains people. Traditionally, the poorness of soil and difficulty of access kept cultivators out. Again, it is only with the entry of India into a world economy as a result of British colonialism that the Nayadis' hills are taken over by cultivators.

6 This may explain the supposed racial distinctiveness of these populations.

7 My use of the concept 'internal' and 'external' frontiers stems from Lattimore's distinction between 'frontiers of exclusion' (such as the northern Chinese-nomadic border) and 'frontiers of inclusion' (such as the marginal hill tribes of southern China) (Lattimore, 1962b : 475-477).

8 Ghurye long ago recognized the important interaction between hill tribes and Indian civilization. He notes,

'...the proper description of [so-called aboriginals] must refer itself to their place in or near Hindu society...the only proper description of these people is that they are the imperfectly integrated classes of Hindu society. Though for the sake of convenience they may be designated the tribal classes of Hindu society, suggesting thereby the social fact that they have retained much more of the tribal creeds and organization than many of the castes of Hindu society, yet they are in reality backward Hindus' (Ghurye : 19).

However, Ghurye's explanation for why these groups are still

imperfectly integrated is historical anachronism: they just have not yet caught up. At least for hunters-and-gatherers this explanation misses the essential point that their non-absorption indicates an essential, albeit marginal, economic symbiosis with the plains. Furthermore, to accept the absence or presence of Hinduism as the most important diagnostic is to ignore the fact that economic interaction predominates.

CITATIONS

Aiyappan, A. 'Social and Physical Anthropology of the Nayadis of Malabar.' *Bulletin of the Madras Government Museum*, new series, general section vol. II, 1930-1937.

Ehrenfels, U. R. *Kadar of Cochin*. University of Madras. Madras, 1952.

Furer-Haimendorf, Christophe von. *The Aboriginal Tribes of Hyderabad, vol. I—Chenchu*. Macmillan. London, 1943.

Ghurye, G. S. *The Aborigines so-called and their future*. Popular Book Depot, Bombay. 1943.

Helms, Mary W. 'The Purchase Society : Adaptations to Economic Frontiers' (unpublished manuscript, 1968).

Iyer, L. K. Anantha Krishna. *The Cochin Tribes and Castes*. Higginbotham, London. 1909-1912.

Kosambi, D. D. 'Living Prehistory in India.' *Scientific American*, vol. 216 no. 22, 1967 : 105-114.

Lattimore, Owen. *Inner Asian Frontiers of China*. Beacon Press. Boston. 1962a.

Studies in Frontier History, Collected Papers 1928-1958. Mouton. Paris. 1962b.

* Leach, E. R. 'Did the Wild Veddahs Have Matrilineal Clans?' *Studies in Kinship and Marriage presented to Brenda Seligman*. Ed. I. Schapera. Royal Anthropological Instit. London, 1963.

Lehman, Frederick K. *The Structure of Chin Society*. Illinois Studies in Anthropology, no. 3. Urbana, 1963.

Majumdar, D. N. *Races and Cultures of India*. Asia Publishing House. Bombay, 1961.

Roy, Sarat Chandra. *The Birhors*. Publ. by the author. Ranchi, 1925.

Sahlins, Marshall. 'The Segmentery Lineage: An Organization of Predatory Expansion.' *American Anthropologist*, vol. 63, 1961 : 322-345.

Seligmann, C. G. and Brenda Z. Seligmann. *The Veddas*. Cambridge University Press. Cambridge, 1911.

Service, Elman R. *Primitive Social Organization : An Evolutionary Perspective*. Random House. New York, 1962.

Weber, Max. *From Max Weber : Essays in Sociology*. Ed. and Tr. H. H. Gerth and C. W. Mille. Oxford. New York, 1958.

FACTIONAL POLITICS IN VILLAGE INDIA

NITYANANDA PATNAIK

H. D. LAKSHMINARAYANA

(*Received on 6 November 1968*)

Abstract : Faction is a part of social structure and emerges due to several factors. Studies conducted in different parts of India show that the transition from the feudal order to democratic decentralization has given rise to factions. The authors' hypothesis is that, consequent upon the introduction of adult franchise and Panchayati Raj, factions have been sharpened and the most populous non-dominant castes are emerging as rival groups in competition with the erstwhile 'dominant' minority castes for political power. The detailed morphology of factions in the villages can be known by making studies in different parts of the country.

POLITICAL Anthropology was pre-occupied with the taxonomy, structure and function of political systems. Recently there has been a shift from static and synchronic analysis of morphological types to dynamic and diachronic studies of political change in small-scale political arenas. The processual dimension of political dynamics include studies of (1) political change, (2) the processes of decision making and conflict resolution and (3) factional politics.

This paper deals with a comparative analysis of factionalism, one kind of political process, as found in 6 peasant villages, 3 in Mysore and 3 in Orissa. Faction is a special kind of political organization and the study of factionalism was found necessary to understand politics of these peasant villages. Before proceeding to give an analysis of the factional organization and the relationship between factionalism and

* The authors are Joint Director (Cultural Anthropology) and Research Officer respectively, at the National Institute of Community Development, Rajendranagar, Hyderabad-30 (A. P.), India.

socio-political change as noticed in these 6 villages, it is necessary to say what exactly is meant by such terms as political activity, political power and faction and correlated concepts such as vertical and horizontal cleavages which find mention frequently in the text of the paper. As has been pointed out above, factionalism is a kind of political activity, which in turn means 'organized conflict over public power'. Rival groups engaged in political activity make efforts to exercise control over resources and also expand their control over it. Nicholas has said 'Participants in political activity attempt to expand their control over resources (which he calls power), or if they do not, they are not engaged in political action' (1966 : 52).

Factionalism, its Part in Social Structure

Factionalism pertains to a species of social conflict, and refers to a form of interaction concerning a class of unstable groups called 'factions'. Faction is generally a group of a larger unit which works for the advancement of particular persons or policies. It arises in the struggle for power and represents a division on details of application and not on principles. Factions also signify a state of polarization with respect to an anterior group in which they have their being. Factionalism has its locus within the orbit of intra-group dissension.

Factionalism occurs when large changes occur in the life-situations of members of the group. For instance, when the opportunities open to the group with which the individual has identified himself are limited, the person may direct some of his aggressiveness against other members of the group.

Faction is a part of the social structure. The idea of equilibrium in the social structure is no longer true. And the dynamic picture demands recognition of the possibility that the operation of a social system, however simple, involves continual tendencies to change (Firth 1952 : 82). In such change, basic relations in a system get altered and in extreme cases lead to factions. In fact, factions are the predecessors of modern political parties. When

authority was in a few hands and politics was a private affair, factional cleavages occurred over the advisers of the sovereign. As rivalry for power widened, the proportion of the community which actively participated in political life and electoral practices developed, self-conscious groups undertook to maintain their organization from one electoral crisis to the next and to present candidates in their own names for the available posts. Under such conditions factions become parties.

Nature and Organization of Factional Politics

Factional politics emerges out of conflict or competition for public power. In every social structure there are occasions for conflict, since individuals and sub-groups are likely to make claims to scarce resources, prestige or power positions (Coser 1967 : 308). In small groups, such conflicts are more intense and pervasive. For instance, in a tribal community the entire society may be regarded as a political arena. Individual villages may have significant political power and so constitute arenas in their own right. Factional political systems are never found in large-scale arenas. The tie between leader and follower in a faction is based on a personal transaction between them. As arenas grow larger, leader-follower ties dissolve into quasi-group networks.

Membership in Factions

Factions may be exhaustive, involving all members of a society who are eligible to participate in politics. It may be exclusive, in that only people who are in complete agreement with and have deference to its leaders are eligible to be its members. Factions have a leader and followers, and the membership is not spontaneous or automatic as in the case of caste. Members are recruited to factions chiefly for mutual benefit. The leader bestows some favour on his followers who support him in return. Faction-leaders are ordinarily competitors and mostly well-to-do and have great control over resources. Where resources are dispersed there the chances are more for emerging factions. In such a situation the leaders of the

several factions vie with one another to bag resources, support etc., from their counterparts. The loss of one is the gain of the other.

In factional organizations the recruitment of followers is diverse. It is based on kinship groups, friends, patron-client, master-servant, borrower-lender relationships. In short, factional supporters are tied to their leaders by very diverse transactions.

Faction and Political Party

The political parties are composed by individuals who have become urbanized, have received the appropriate forms of education, and have demonstrated skill in establishing the necessary personal relations, and who are admitted to the ranks of the elite. The path by which they are recruited into their political roles, is essentially an acculturation process and is not dependent upon ascriptive process (Pye 1966 : 520). In contrast to political parties, factions are localized cliques organized on kinship, friendship and patronage, and are ascriptive in character. In villages where factions prevail, it is difficult to distinguish a distinct political sphere. The social status of the individual and his personal ties largely determine his political behaviour and the range of his influence. Their success depends upon the manner in which they relate themselves to the social structure of the community than on the substance of their political views.

In villages political activities are not part of any single general process. There are several distinct and nearly unrelated political processes. But those who participate in the political life of the village are not an integral part of the national politics, because of the localized and diverse factions, which have their own separate and autonomous political techniques.

Factionalism and National Politics

In the process of political development, a new elite tends to come up at the local level and slowly even at the State level. In India, for instance, such development takes its

roots in the peasantry and in the countryside. The peasant community, as we have already pointed out, has factions, due to conflict occurring as a result of limited goods. And, as a result of democratic change, an army of rural elites has emerged. These elites have a close connexion with the factions at the village level. Because the adult franchise has given a right to everyone to vote for a candidate, a political leader has to win the favour of the electorate by extending patronage to them in various ways. Where factions prevail, the political leader becomes more cautious to keep his followers subservient to him and resorts to many irregularities by showing favours, lest they align with another faction and thus jeopardise his position. Thus the political leader acts as a link between the faction at the village level and political activity at a higher level. In India, for instance, the periodical elections to various organizations have made a sound ground for factions, which though not reflecting any policy matter at the national level maintain their support to the leader who ultimately takes part in national politics. For some time, at least, he may forget his local factions when dealing with matters of national importance. But when local issues crop up he has to show considerations to his local interests. In this way factions are related with national politics. They may be latent, nevertheless they run as under-currents.

External Political Influence of Village Politics

Adult franchise and democratic decentralization have gone a long way in India, for instance, to link up local politics with external politics. Due to suffrage, people who belong to economic and numerically dominant castes tend to take new roles in politics. The various political activities provide them with an opportunity to associate themselves with the political elites, for whom the village leaders belonging to the dominant caste act as political agents. These agents give support to their leaders above and in return get some favour from them. This can be called as a sort of 'political patron-client' relationship. The patron is the political leader above, may be at the taluk, district, state or national level, and the client is

the village-political leader. This leader in turn distributes favours among his followers in the village. Such a type of leadership is also a sort of 'brain trust' to the leaders above.

The impact of external politics on villages may be either positive or negative. By positive means the external political influence creates an awareness among the villagers about national problems and villagers respond to a greater extent. This will enable them to identify themselves with the wider community and develop a cosmopolitan outlook. The negative aspect of external political influence will be division of the village into factions by political elites who play the role of mediocres and try to keep this up for their political advantage. This gives rise to dissensions among villagers and perpetuates rivalry in the village. In such cases, factions remain as barriers to development. Each faction, instead of co-operating with the other, tries to brow-beat and enjoy the adversity of its opponent. In villages, as in India, factions have increased due to this negative contribution of external influence. This has been accentuated by adult franchise and Panchayati Raj. The growing political consciousness and disappearence of charismatic leadership have also escalated factions.

Vertical and Horizontal Cleavages

Faction, so to say, is a kind of cleavage in conflict with another cleavage for political power. Cleavages are of two kinds : vertical and horizontal. Vertical political cleavages are characteristic of the ideal unstratified society like any ideal tribal community, while horizontal political cleavages are characteristic of an ideal stratified society like caste.

Vertical political cleavages may appear within a caste between segments of patrilineal descent groups and is generally called segmentary factional political cleavage. Segmentary lineage conflict is normally met with in structurally equal societies like tribal communities. But the persistence of this kind of cleavage in structually unequal societies like caste may be due to legal rights enjoyed by lineage members to hold certain property jointly in perpetuity.

For instance, to strengthen the lineage organization among the proprietory castes, British settlement of land revenue under Mahalvari in 1820 gave the lineages among the Jats legally recorded rights in perpetuity.

Horizontal political cleavages are found most frequently between different castes. Here, political conflicts are between high and low social classes, not between super-ordinate and subordinate social strata. Caste system, which is a system of social stratification, does not ideally allow of competition between castes as they are intrinsically tied with one another by patron-client social and economic relationships. No caste appears to have any characteristic of a corporate political group. A dominant caste may have autonomous political power. It acts as a field for political competition but not as a corporate political group.

Dominant Caste

The concept of dominant caste, which is thoroughly analysed by Srinivas, is based on the following characteristics, (1) economic dominance, (2) political dominance, (3) numerical preponderance and (4) high rank in social strata. A caste is said to be dominant in a village where it possesses all these characters. But it is not necessary for a caste to have all these qualities to become dominant. Dominance may derive from political power alone. However, universal adult franchise has vested an element of power on many low castes who form the bulk of the population. This has created cleavages between the wealtheir dominant minority and the humbler majority. The former are reluctant to loosen their grip on power, while the latter question their power and attempt to snatch it away from them.

Mysore Villages

Three villages, namely Hariharapura, Hirikalale and Hiralahalli in Mandya District of Mysore State were studied. These villages are about 40 miles from Mandya and are situated at a distance of 6 miles from the Block headquarters. Each of the three villages is at a distance of 12 miles from

the other and are in three different directions from the Block office.

HARIHARAPURA

Location : Hariharapura is a good communication village. It is situated on a plain by the side of the main road at a distance of 6 miles to the west of the Block office. The nearest station is about 5 miles. The village is the panchayat headquarters, the VLW lives in the village. There is a primary school, a Branch Post Office and a co-operative society. It is a terminal village and is exposed to the external world through communication.

Structure of the village : The village is heterogeneous, having 13 castes and a population of 1,111. The castes are stratified. The Vokkaligas—the traditional agriculturists—are dominant in number and hold more than three-fourths of the land. The Harijans are next to the Vokkaligas in number, but are poor in land-holding. The other castes are both numerically and economically insignificant. The following table shows the castes in social hierarchy and the land held by each caste.

TABLE 1

Distribution of castes and land held by them in the village

Caste	Population		% of land held
	No.	%	
Brahmin	20	1.8	3.00
Lingayat	13	1.2	0.75
Srivaishnava	10	0.9	1.00
Vokkaliga	395	35.5	77.00
Krirubina Setty	11	1.0	0.25
Barber	13	1.2	—
Viswakarma	16	1.4	—
Fisherman	56	5.0	4.50
Bovi	9	0.8	—
Pillay	89	8.0	4.00
Harijan	373	33.6	8.25
Christian	27	2.5	1.25
Muslim	79	7.1	—
	1,111	100.0	100.0

In the social hierarchy, the Brahmin enjoys the highest position as in other parts of the country. All the castes are governed by traditional customs of endogamy and commensal restrictions. In the village social structure, the castes are integrated both socially and economically. Socially every caste, except Bovi, Pillay, Christian and Muslim, is dependent upon others. Economically all castes are interdependent through patron-client, borrower-lender and master-servant relations.

Economic aspect : The village is agrarian and paddy is the major crop grown. However, except for the agricultural Vokkaligas and Harijans, the other castes have their traditional occupations. The Brahmins were engaged as priests and were also schoolteachers. They supervised their lands and the lands bestowed on the temples. Likewise, the Srivaishnava family also supervised some land and worked as temple-priest. The Lingayats mainly did business in grocery. Among Vokkaligas, out of 56 heads of households, 50 followed only agriculture, 2 were engaged in contract work and 3 did petty business of running *beedi* shops, besides agriculture. Kuruhina Setty (Weaver) followed besides weaving, tailoring and selling ready-made garments in weekly shandies. The Barbers and Viswakarma followed their traditional occupations. Viswakarmas were in petty business in addition to carpentry and smithy. The Fishermen cultivated lands and were water-patrollers. Fishing was only occasional. The Bovi (Vodda) worked as stone-cutters. Pillays followed agriculture and manual labour. The Harijans worked as tenants and labourers. The Christians were cultivators. The Muslims, being landless, followed different vocations. Four of them did business in grocery, two worked as blacksmiths and six were manual labourers.

Political Aspect : The village had the traditional panchayat where the village headman and other important persons of the dominant Vokkaliga caste acted as arbitrators in the village disputes. The headman moreoever looked after law and order and acted as a representative of the Government to collect

land-tax. Statutory Panchayati Raj was introduced in 1960. Election to one of the seats was held between two Vokkaliga candidates and there has been faction among Vokkaligas which becomes active during elections. The village is represented by formal leaders in the new panchayat set-up. But they are not effective in the village. Two of the three members from this village belong to Harijan and Pillay castes who are subservient to the Vokkaligas and cannot act as leaders of the Vokkaligas. The other candidate belonging to the Vokkaliga caste is not very influential. The panchayat was not effective as the village was divided into two factions, both led by Vokkaligas and followed by members of different castes. The recruitment was based on patron-client, borrower-lender and master-servant relationships.

HIRIKALALE

Location : Hirikalale is an average-communication village, situated in a low depression, half-a-mile away from the main road. It is about 6 miles to the north of the Block office and is surrounded on all sides by cultivated lands. The village is the panchayat headquarters, has a primary school, a co-operative society and a branch post-office.

Structure of the village : This is a heterogeneous and stratified village having castes and a population of 1,109. Here also the Vokkaligas are dominant both numerically and economically, and are followed by the Kurubas (Shepherd). The other castes are small in number and hold little land, as shown below.

TABLE 2

Distribution of castes and land held by them in the village

Caste	Population No.	Population %	% of land held
Vokkaliga	423	38.2	42.0
Kuruba (Shepherd)	384	34.6	34.0
Viswakarma	91	8.2	5.5
Potter	29	2.6	1.5
Oil-presser	27	2.5	2.3
Washerman	20	1.8	2.5
Barber	12	1.0	0.2
Harijan	120	10.8	12.0
Christian	3	0.3	–
	1,109	100.0	100.0

This village does not have any castes who are superior to Vokkaligas in the social hierarchy. The Kurubas and Vokkaligas have interdining only. Both are distinctly endogamous groups. The other castes take food from these castes only. They are all endogamous and interdining is prohibited among them. Nevertheless, each caste is dependent upon other castes.

Economic aspect : The village is comparatively poor. All the lands are rain-fed and there is no guarantee of having good harvest every year. Yet, villagers accept the limited goods without trying to venture into some new fields of earning. The occupational pattern still identifies itself with caste. The Vokkaligas do agriculture in the same traditional manner. The Kurubas, who are shepherds, mostly live by agriculture. Other service-castes, besides following their traditional occupation, follow agriculture also. But they have more obligation to serve their patrons and cannot neglect the traditional occupation however impoverished they may be. The patron-client bondage has bound the community into an integrated whole.

Political aspect : Traditionally the political activity of the village was settling village disputes and maintaining law and order. These were looked after by the village headman, who was supported by the village leaders, belonging to Vokkaliga and Kuruba castes. The village has a statutory panchayat since 1960. The members were unanimously elected to the body. Yet, the decisions in the panchayat were arrived at mostly by voting on crucial matters.

Though the elections to the panchayats were unaninous, it was only the prerogative of the two dominant castes, namely Vokkaliga and Kuruba, to occupy those positions. The village had some fissiparous tendency, as the leaders of both the dominant castes had encroached upon common land near the village tank. But there was no overt resentment among the members of the village.

HIRALAHALLI

Location : Hiralahalli, the poor-communication village is situated 3 miles away from the main road and is 6 miles to the east of the Block office. The village is small and is located in a plain with cultivated lands on all sides. The village has a stream nearby, which irrigates a portion of the land. The major area of the land is rain-fed and *ragi* and sugarcane are grown. The village has a single-teacher primary school.

Structure of the village : The village is a small but heterogeneous one, having 6 castes with a population of 368. As in the other two villages, here also the Vokkaligas are numerically dominant and hold large amounts of land. The other castes are very insignificant both in size and landholding. In the following table the size of each caste and amount of land held is given in the hierarchical order.

TABLE 3

Distribution of castes and land held by them in the village

Castes	Population		% of land held
	No.	%	
Brahmin	18	4.9	2.6
Vokkaliga	255	69.2	83.0
Viswakarma	28	7.6	5.2
Oil-presser	6	1.6	0.9
Basket-maker	13	3.5	1.3
Harijan	48	13.2	7.0
	368	100.0	100.0

As the above table shows, though the Brahmins are a minority, they are on the top in the village social structure. As in other villages, here also every caste is dependent upon one another and are non-competitive. The system is maintained through patron-client relationship.

Economic aspect : This village is basically agricultural as the other villages. Since most of the lands are rain-fed, only one crop is grown in the year. All the castes adhere to their occupations,in addition to cultivating their lands. The occupation pattern of the various castes is similar to that of the other two villages, and needs no elaboration.

Political aspect : The village, having a small population with a powerful dominant caste, has no factions. The traditional village headman is still important and is unanimously selected by the villagers as their representative in the group panchayat. Since the village is small and all castes accept the Vokkaliga as their leader there is no conflict in village matters and people are not very much interested in political activity, thanks to the unity of the village.

Orissan Villages

MANIKPUR

Manikpur is a poor-communication village, heterogeneous in caste composition, situated 9 miles and 3 furlongs to the south of Berhampur town. A fair-weather road connects this village with the Calcutta-Madras National Highway at Tatadapalli which is situated at a distance of 9 miles to the south of Berhampur. The village is surrounded on all sides by rain-fed paddy fields and uplands. In the vicinity of the village to its south are hill ranges which provide pasture for the cattle.

As there is no good road to the village, it is cut off from bus-service which touches its boundary at Kotharsingh, a place about one furlong from Manikpur where the people board the bus for Berhampur town. But during the wet season, when this bus-service is closed, people walk up to Tatadapalli where they take a bus for the town.

The total population of Manikpur is 521 of which 243 are male and 278 female. They belong to 12 different castes. In the hierarchical order they are presented below with population of each in Table 4.

TABLE 4

Castes of Manikpur in hiearchical order with population

Sl. No.	Caste (Native term)	Caste (English equivalent)	Population: Male	Female	Total population	Total family	% of land possessed
1.	Karana	(Scribe)	4	2	6	1	–
2.	Mali	(Gardener)	9	13	22	2	–
3.	Badhei	(Carpenter)	7	7	14	4	0.25
4.	Dora	(Cultivating caste)	62	71	133	27	37.47 (Dora and Telenga together)
5.	Telenga	(Bangle-seller)	6	5	11	3	
6.	Gola	(Buffalo-herder)	88	90	178	40	40.64
7.	Reddi	(Cultivator)	42	60	102	30	20.71
8.	Liary	(Fisherman)	2	2	4	1	–
9.	Patsalia	(Weaver)	1	3	4	1	–
10.	Dhoba	(Washerman)	8	9	17	3	–
11.	Damba	(An untouchable caste)	8	9	17	5	0.93
12.	Dandasi	(Watchman)	6	7	13	3	–
			243	278	521	120	100%

According to the definition of the concept of dominant caste given by Srinivas (1955 : 86), the Golas may be said to be the dominant caste in Manikpur. They preponderate numerically over all other castes and own the major portion of land in the village. But they are the sixth in caste-ranking and do not have 'decisive' political authority in the village. Nicholas thinks, 'In the ideal model of a village caste system, dominance derives from a superior power alone, numbers play no necessary part in the establishment of a dominant caste' (1968 : 273). These considerations create some difficulty in designating Golas as the dominant caste. In matters of political preponderance no caste in the village has exclusive power. But by virtue of their traditional leadership-position, the Doras have a superior political recognition in the village. The traditional headman of the village hails from this caste and the post continues to be chosen by adelphic succession in the headman's family. No village assembly carries on its business without the presence of the traditional chief of the village. The gram-panchayat representative comes from the traditional headman's lineage.

Though the traditional leadership and the membership of the statutory village council rest in the Dora caste, this caste

does not in fact exercise 'decisive' dominance in political or social matters. They occupy the fourth position in caste-ranking, but they are one rung higher than the Golas who are more populous and have more control over wealth than any other caste in the village.

No caste has 'absolute' dominance in the village. The leadership of the village is recruited from mainly three castes—three from Bora, two from Gola and one from Reddy caste. These six leaders have to be present in the village assembly at the time of taking any decision on matters of common concern. The village assembly which generally is held at the recreation centre is sometimes held in front of the traditional headman's house or of one of the Gola leaders. Sometimes it is also held in the carpenter's workshop.

In the ideal village social structure absolute dominance of a caste does not foster competition between castes within the system. Does the absence of it suggest possibilities of such competition ? In Manikpur no caste wields absolute dominance and there is absolutely no inter-caste competition and segmentary factional conflict. Consensus is the chief characteristic of the decision-making process and the unanimous decision achieved by the leaders and the villagers is whole-heartedly followed by all of the village. In no matter have they as yet resorted to any tension-generating system like voting to arrive at any decision. In short, the Golas have numerical preponderance, and preponderant economic power. But they seem to be lacking in preponderant political power. In the case of the Doras they are higher in caste-ranking than the Golas but they do not occupy the highest rung in the caste-constellation. Though they enjoy superior political power. that power and position are neither divisive nor absolute. In this situation obtaining in Manikpur, no caste can be said to have decisive dominance. On the contrary, each of these important castes exercises relative dominance in its own right.

BADAPUR

Badapur is a medium-communication village located in the midst of paddy fields at a distance of 4 miles from Gopalpur-on-

sea on its south and 4 miles from the Madras-Calcutta Highway on the north. It is connected by a fair weather 3-mile long approach road which starts from the Village Level Worker's training centre at the Rangubunda village on the hard surfaced road leading to Gopalpur. The village is about 4 miles from the National Highway. Its location approximates the tip of a triangle, of which the other two points are occupied by Berhampur on one side at a distance of 9 miles and Chatrapur on the other at a distance of 8 miles.

There is no direct bus service to the village and compared with Manikpur which is only 3 furlongs from the National Highway, Badapur is 3 miles as the crow flies from this highway. In spite of its situation at a greater distance from the bus route, the people of this village are in fact more mobile than those of Manikpur. The factors contributing to the greater mobility which will be dealt with in greater detail later on seem to be its situation and easier accessiblity.

Caste and population : Badapur has a population approaching 724 souls distributed among 11 different castes, arranged in a hierarchical order with male/female population of each caste as shown in the table given below.

TABLE 5

Sl. No.	Castes mentioned in the hierarchical order	English equivalent	Male	Female	Total population	No. of families	% of land possessed
1.	Brahmin			1	1	1	0.21
2.	Gauda	Milkman	150	160	310	66	71.28
3.	Badhei	Carpenter	24	31	55	11	16.62
4.	Gudia	Confectioner	18	16	34	7	1.12
5.	Pandara or (Pandari)	Vegetable-grower	3	6	9	1	0.35
6.	Teli	Oilman	15	12	27	6	4.91
7.	Bhandari	Barber	3	4	7	1	0.14
8.	Sunari	Goldsmith	17	22	39	5	4.24
9.	Dhoba	Washerman	3	1	4	1	–
10.	Bauri	Harijan	97	108	205	41	1.18
11.	Dandasi	Harijan	17	16	33	6	–
			348	376	724	146	100.0%

As the table shows the Gaudas are more populous and owners of a larger percentage of land than any other caste in the village. They are next to Brahmins and above all other castes in social rank. In the pre-Panchayati Raj days the Gaudas were not considered as a dominant caste. The real dominant caste was Badhei (Carpenter), numerically insignificant and economically much inferior to the Gaudas in aggregate. The dominance which was vested on the Badhei caste was due to the ascribed political chieftainship of a well-to-do family of this caste. He is the richest man in the village and the *de facto* political supremacy was held by his family in the line of primogeniture.

The traditional political order in the village has recently undergone considerable change. Universal adult franchise has given the most populous caste (Gauda) an element of power and political rights which were originally in the hands of the dominant large land-owning caste. The direction of influence of political change is the weakening on the one hand of the authority and position of the ascribed traditional leader and strengthening on the other hand of the position of the populous caste (Gauda), which has now, become the dominant caste in the village. An elite of this caste has been elected President of the Village Council and has thus eclipsed whatever authority and position the Badhei leader had in the village.

In the pre-Panchayati Raj days dominance derived from a superior power alone and number played no necessary part in the establishment of dominance. But the effect of universal adult suffrage and PanchayatiRaj has helped the most populous castes to consolidate their numerical strength for dominance, political authority and power.

Caste organization : A revivalistic tendency seems to emerge among certain castes, particularly among populous castes. This is with particular reference to reorganization of traditional internal social organization, i.e. caste panchayat. The motive force behind the growing sense of revivalism is to maintain the *status quo* in regard to caste unity and solidarity which was once in existence among them but later on became disorganized for one reason or another. The central idea is that each caste

through its new cohesion and esprit-de-corps hopes to be in a better position to exercise its right and fight for political power. For example, the Milkmen of Badapur are found to have reinforced their caste solidarity by resuscitating their caste organization, and the direct benefit of such restoration of caste solidarity is their ascendancy to power in the local democratic political organization. (Jaganath Gauda of Badapur has been elected to the position of Sarpanch and his success in the election is attributed to the numerical strength of his caste in his constituency.)

Universal adult franchise seems to have given an element of power to the numerically preponderant caste who, as a result, seem to be showing a great interest in revitalizing their moribund caste organization. One of the direct consequences of revivalism of caste organization in the villages is the emergence of horizontal cleavages which divide high-ranking dominant castes and populous low-ranking castes. Where competition for rank-position achieved through the processes of sanskritization and westernization was the special feature of village life, direct conflict between super- and subordinate gronps for political and economic supremacy seems to be the important feature of the new order.

SASANPADAR

Location : Sasanpadar is situated at a distance of 10 miles to the south of Berhampur town, 5 miles on the Calcutta-Madras Highway from Berhampur and 5 miles on the approach road from Randha on the highway to the village. There is no bus service to the village. People of Sasanpadar avail of of bus at Randha only.

The cluster of villages within Sasanpadar Gram Panchayat constitutes three villages—Randha, headquarters of the panchayat, Chikarda and Sasanpadar. Randha is at one end of the approach road and Sasanpadar is at the other. Chikarada is between these two villages in the middle on the side of the approach road.

From Chikarada one can get a view of Sasanpadar. The pucca structure of Vishnu temple in the outskrits of the village

makes its appearance different from the other two villages. As one approaches nearer, one can hear the sound of an electric motor and on reaching the outskrit one sees a rice-huller using the motor run by the electricity, installed recently in the village. On the whole, Sasanpadar is physically and culturally different from the other two villages for its combination of two opposites—sacred, represented on one side by the Vishnu temple and secular, represented on the other by the rice mill and electricity.

TABLE 6

Caste composition of Sasanpadar
(Castes arranged in hierarchical order)

Caste	Population			Total Famiies	% of land possessed
	Male	Female	Total population		
1. Brahmin	97	82	179 (11.30)	27 (8.92)	39.12
2. Sunari	1	3	4 (0.25)	1 (0.33)	–
3. Mali	18	11	29 (1.85)	5 (1.65)	0.80
4. Gauda	4	6	10 (0.64)	2 (0.66)	–
5. Gudia	9	11	20 (1.26)	2 (0.66)	–
6. Badhei	24	28	52 (3.28)	8 (2.64)	1.70
7. Liari	22	25	47 (3.00)	8 (2.64)	–
8. Kumbhar	60	50	110 (6.95)	19 (6.27)	3.55
9. Barika	12	11	23 (1.45)	5 (1.65)	0.53
10. Kenta	88	88	176 (11.12)	32 (10.65)	4.18
11. Arua	437	419	856 (54.10)	179 (59.06)	50.12
12. Dhoba	5	6	11 (0.70)	3 (0.99)	–
13. Bauri	21	17	38(2·40)	6(1.98)	—
14. Dandasi	16	11	27 (1.70)	6 (1.98)	–
	814	768	1582	303	

Caste and population : Sasanpadar has a population of 1582 (814 males and 768 females) belonging to 14 different castes. The ranking of each caste and population is given in the above table.

Brahmin was decisively the dominant caste in the village. Their dominance derived from their political power, in that one of this caste was the traditional headman of the village. Political power of this man was coupled with economic power represented in his largest land-ownership. Besides, in caste-ranking Brahmin occupies the highest social position.

The Brahmins are not numerically preponderant in the village. They are next to the Aruas who preponderate over all other castes inhabiting the village. In the traditional village social system, number was not considered as a necessary condition for dominance. What was most important was political power, high caste-ranking and economic power, which together brought about dominance.

In fact, the Aruas, who are considered to be one of the subordinate castes, possess more land (50.12) than the Brahmins (39.12), if each of these groups is considered in totality. But individually considered, the headman of the Brahmin caste and a few agnates of his lineage are big landlords having about 1/3 of the land of the village under their possession.

The Brahmin headman was not only the chief in the political field, he was also president of economic and religious institutions. He occupied the presidentship of the co-operative society of betel-leaf growers in the village and was the president of the regional assembly of his caste. Thus the Brahmin headman was the arbitrator, mediator and councillor in all matters, social, political and economic. He was the *de facto* leader of the village. Every matter of the village was settled by consensual procedure in which decisions were arrived at by unanimity. Of course, the autocratic headman had the major voice, which was responded to favourably by all of the village. He was feared for his economic power and respected for his high ritual position.

Caste after Panchayati Raj : When Panchayati Raj was introduced in 1959, the leaders of the village had no idea about

the status and role, powers and privileges of its office-bearers. Therefore they were not interested in it. But when they found in subsequent years that the panchayat is a powerful political organization and its office-bearers enjoy authority and privileges which are tempting, they tried to occupy positions in the panchayat. Membership of the statutory village councils is not by birth or by unanimity as was the case in traditional chieftainship or other leadership-positions in the village. Membership in the democratic decentralized bodies is decided by majority voting which was not essential in the traditional order.

In pre-Independence times, when power was centralized in the hands of a few favoured persons of economic power and of houses of nobility and rank, the order of rule was that 'might is right'. But this order changed in the post-Independence period. Universal adult franchise gave an element of power to the more populous communities who were at one time subordinate to the minority super-ordinate community. 'Majority is right' became the order of the day.

Universal adult suffrage which replaced the consensual procedure or autocratic rule for making public decisions is only one aspect of the social change which has gained momentum after Independence. The other major aspect is the economic diversification resulting from increased mobility and employment opportunities. Control over resources was, in earlier times, centralized and the village was more or less a closed society. With the development of communication facilities, the countryside was opened up and with the dispersal of control over resources the single centres of power became multiple. All these changes tended to bring communal harmony to an end and give rise to competing centres of power and factional conflicts in the villages.

This is exactly what has happened in Sasanpadar. As has been pointed out earlier Brahmins in this village were dominant and one of the Brahmin families was the head of the village, president of the co-operative society of the betel-leaf growers and was the president of the elected village council.

The Aruas, who were numerically preponderant, were politically, economically and socially a subordinate caste.

One of the members of this caste, by dint of labour, improved his economic condition. He installed a rice mill after electricity was available in the village and earned sufficient money which he invested in the purchase of good cultivable land. With the increased economic power he became a new leader. Where leadership was at one time concentrated in the hands of a Brahmin family, it was dispersed with the emergence of a new leader. Leadership was dichotomized as land-holding became more or less equitably distributed between the leaders. Partition of property among co-sharers of the Brahmin family also contributed to the dispersal and equitable distribution of property.

The progressive Arua leader tried to subvert the centralized authority of the Brahmin leader. His first attempt in this direction was to take hold of the presidentship of the betel-leaf co-operative society, the majority of members of which belonged to his caste. He applied the rule that the majority is right and was chosen as the president of the society. All his caste people unanimously supported his case. Number was, for the first time, applied for obtaining political and economic rewards.

This alteration in the political organization of the village gave rise to factional conflict between the two leaders, a large majority following the traditional Brahmin leader and another group following the emerging Arua leader. The castemen and his friends rallied round the Arua leader who was the core of his faction, while the Brahmin leader formed the rival core of his castemen and other followers belonging to his faction. Factional conflict constitutes now the dominant mode of political organization in the village.

It would be interesting to examine whether people of two different social strata compete with one another when one is high and one low even in the economic sphere. Bailey has said that the element of competition is absent in the caste system and there is mutual relationship in the form of patron-client

relationship or other forms of relationship which run up and down the caste system. It is this economic and ritual interdependence that does not allow competition between the castes. If any conflict or competition arises ever in a peasant village, it is either within the dominant caste or between high and low social groups, not between different social strata.

In Bisipara, a highland village in Phulbani district, Orissa, which Bailey studied, he observed that conflict was originally existing within the dominant Warrior caste. Nicholas has described this type of conflict as 'segmentary lineage conflict' which operates in a vertical direction. But the new economic opportunities, legislative favours, and increasing population have recently created conditions for Baud outcastes to act as a corporate political unit and now the cleavage in the village is between the low outcaste and high Warrior caste. The dominant Warrior caste earlier provided a field for political competition, but in recent times the cleavages across which the conflict passes are along the horizontal direction between the low outcaste and high Warrior caste. Not that the two social strata have come into conflict with one another. But of the two social groups, the low group strives to grab powers and privileges granted to it by the Constitution and the high group, unwilling to loosen its grip over the powers and privileges which it considers its birthright, resists it.

Something different from what is observed in Bisipara has happened in Sasanpadar. First there was no cleavage worth mentioning within the Brahmin community. Whatever sporadic conflict was present was at the time of partition, but as matters were settled conflict subsided. Conflict had no function as a leeway for any political reward, because the headmanship was customarily handed down in the line of primogeniture and the tax-collecting authority was elsewhere and there was no other power in a Rayatwari village worth competing for.

Besides, the dominant personality of the Brahmin headman who was pious and noble did not encourage any kind of segmentary lineage conflict within the Brahmin community.

Conclusion

The discussion of six villages in the preceding pages has shown that some of them had some factions. It has been shown that factionalism occurred when some changes took place in the villages. These changes are many, like competition over economic resources, where members fight with one another to snatch away as much as possible ; competition for political power, which has grown due to adult franchise and Panchayati Raj. In our study of six villages, faction has emerged in three villages—Hariharapura in Mysore, and Badapur and Sasanpadar in Orissa—due to the introduction of adult franchise and Panchayati Raj. There was no faction in the other three villages. The study of the three villages having factions reveals that Hariharapura in Mysore had factions among Vokkaliga, where the cleavage was vertical. The two Orissan villages had factions and the nature of cleavage was horizontal. Whatever the nature of cleavages, they arose for political power, and were sharpened by franchise. Similar illustrations from other places can be given here. For, instance, in Ratnagiri of Andhra Pradesh, we can see the cleavages among the Velama caste, due to political activity in the elections (Rangarao). Similarly, among the Rajputs of Ramkheri in Central India, factions were due to political activity, which started from 1946 and gained impetus after the introduction of statutory panchayats (Mayer). These factions were among members of the same dominant caste like Vokkaligas in Mysore, Velama in Andhra Pradesh and Rajputs in Central India, and are vertical cleavages.

In contrast to vertical cleavages, political activity has given rise to horizontal cleavages in Badapur and Sasanpadar in Orissa. Castes which were dominant politically and economically, like the Brahmins and Gaudas, are being challenged by weaker and more numerous castes like Arua and Bauri, who are consolidating their numerical strength due to franchise. Similarly, the Bagdi caste, which is numerically dominant in Ranjana in West Bengal, has become a political rival to the erstwhile dominant Sadgope caste (Chattopadhyay).

Our study and the studies of others reveal that adult franchise has brought cleavages, both horizontal and vertical, in villages. But we cannot attribute factions only to political activity, which implies that they are of recent origin. Factions, as already pointed out, are a part of social structure. And they were prevalent even before adult franchise, though the six villages we have studied do not show any such evidence. Factions are due to several causes. New economic opportunities give rise to competition and are followed by factions, because everyone wants to exploit the limited resources of the village. For instance, in Haripura (P. E. O.) of Mysore, the introduction of canal irrigation increased the number of factions from two to six. 'Soon after the coming of canal irrigation, some lands became marshy and malaria became a problem. The government acquired land for shifting the habitation area of the village and auctioned house plots to the villagers. This issue of land acquisition and shift to the new site caused a serious quarrel which involved the entire village' (p. 89). Similarly, economic expansion due to canal irrigation caused imbalance between the economic, political and ritual status of individual households, which created cleavage between 'progressive' and 'conservative' factions. These factions based on kinship and mobility, get translated into political mobility (Epstein). In both the cases the faction was among dominant Vokkaligas and the cleavage was vertical. So also was the case in Sasanpadar in Orissa. Similar economic opportunity can also bring about conflict between the haves and the havenots, as can be seen between the dominant Rajputs and poor Marathas of Goan Maharashtra (Orenstein).

Thus, while political activity and new economic opportunity bring factions, having horizontal and vertical cleavages, they are not the only decisive factors. Studies conducted in different parts of the country reveal that the transition from a feudal system has invariably given rise to factions between rich and poor. For instance, in Madras the backward caste movement became vigorous and the Harijans formed a rival group and challeged the supremacy of the Brahmins who enjoyed the feudal benefits (Kathleen Gough). Legislative

reforms about landholding also play an important role in creating cleavages between the landholding and landless classes (Beteille). In a country with so much diversity, it is not easy to relate factions to any particular factors. Factions emerge out of several forces like population pressure, economic mobility, increased education and adult franchise, and the breaking down of joint families, for instance, among Jats (Lewis). Factions which emerge out of economic mobility and administrative changes always give rise to fission among different castes, which align themselves with the group akin to them. For instance, because of these changes in Bisipara in Orissa, factions started among dominant Baud Warriors who were a corporate political unit. Later it extended to other castes (Bailey).

The review of these studies shows that factions as a part of social structure emerge due to several factors, economic, political and legislative. From a perusal of several studies and our own study the following observations can be made.

Where the dominant caste is more populous, the cleavages are vertical, among members of the same caste and same lineage ; where the dominant caste is not numerically preponderant (below 40%), the cleavages are likely to be horizontal, where faction cuts across caste. Factions perpetuate in vertical cleavages within the dominant caste, for instance, among Vokkaligas is Haripura, Dalena and Wangala in Mysore, among Velamas in Andhra Pradesh and Jats in North India. The few studies referred to above were conducted mostly during the pre-Panchayati Raj period and reflect some of the above observations. But the three villages, out of six studies by us, show that political activity has sharpened factions. If more studies are conducted in different parts of the country we may find the exact nature of factions in the village.

BIBLIOGRAPHY

Bailey, F. G. 1958 : *Caste and the Economic Frontier*, Bombay, Oxford University Press.

Beals, Alan R. 1962 : *Gopalpur : A South Indian Village*, New York : Holt, Rinehart and Winston.

Beteille, Andre 1965 : *Caste, Class and Power*, Bombay, Oxford University Press.

Chattopadhyay, Gouranga 1964 : *Ranjana : A Village in West Bengal*, Calcutta : Bookland Private Limited.

Coser, Lewis 1967 : 'The Functions of Conflict'. In N. J. Demerath-III and Richard A. Peterson (Eds.), *Systems, Change and Confliet*. New York ; Free Press.

Epstein, T. Scarlett 1962 : *Economic development and social change in South India*, Bombay : Oxford University Press.

Firth, Raymond 1952 : *Elements of Social Organisation*, London : Watts.

Gough, E. Kathleen 1955 : 'The Social structure of a Tanjore Village'. In McKim Marriott (Ed) *Village India*, Bombay : Asia Publishing House.

Govt. of India 1955 : Planning Commission, P. E. O., *Leadership and groups in a South Indian Village*, Delhi : Manager of Publications.

Lewis, Oscar 1958 : *Village life in Northern India*, Urbana : University of Illinois Press.

Mayer, Adrian C. 1960 : *Caste and Kinship in Central India : A Village and its region*. London : Routledge and Kegan Paul.

Nicholas, Ralph W. 1966 : 'Segmentary Factional Political Systems'. In Marc J. Swartz, Victor W. Turner and Arthur Tuden (Eds.) *Political Anthropology*. Chicago : Abdin Publishing Co.

Orenstein, Henry 1965 : *GAON : Conflict and Cohesion in an Village*. Princeton, N. J. : Princeton University Press.

Pye, L. W. 1966 : 'The nature of transitional politics'. In Jason L. Finkle and Richard W. Gable (Eds.), *Political Development and Social Change*, New York, Wiley.

Rangarao, K. 1965 : 'Leadership in a community development village'. *Economic Weekly*, 17 : 1375-79.

Srinivas, M. N. 1955 : 'The social syssem of a Mysore village'. In McKim Marriott (Ed.). *Village India*, Bombay : Asia Publishing House.

GROUPS AND PROCESSES OF POLITICAL CHANGE IN NORTH INDIAN GOPALPUR

R. S. KHARE

(Received on 15 November 1968)

Introduction

THIS paper discusses the changing patterns of political behaviour in a North Indian village. It supplements the earlier studies (Kare 1962 a, b ; 1964), and focuses attention on the 1960-1965 period. In order to place certain recent developments—the continuities and discontinuities of social change—in a proper perspective, the main discussion is prefaced by a summary statement about the conditions that existed between 1935 and 1959. For this study the diachronic perspective helps present the central theme of this paper : that the political organization of an Indian village is getting increasingly more differentiated from within to 'open' itself for the regional and national requirements of democratic politics.

Historically, it is a change prompted and promoted by a series of local and national events over the last thirty years. Sociologically, it is a shift of emphasis from the political groups that were primarily 'closed' (i.e., the ascriptive criteria controlled political interactions), homogeneous, microlevel, and with static resources to those that are increasingly more 'open' (i.e., they offer greater choice of affiliation and interaction), heterogeneous, interlinked (to the wider political network), and with dynamic resources. Politically, it means that now there are no 'given' leaders and followers, no 'automatic' member of any ruling or ruled group, and no 'naturally' unanimous decisions. Opposition dissent, strategy,

---

The author is Assistant Professor, Department of Anthropology, The University of Wisconsin—Green Bay, His address is Manitowoc Country Campus, 705 Viebahn Street, Manitowoc, Wisconsin 54220 U.S.

and augment of political resource are constantly characteristic of the 'new' politics.

In the following discussion, therefore, we will seek to identify and understand those groups and processes that are found responsible for bringing about such a change. How are such processes—for example, decompression and deparochialization of political groups—operating on the political arena in and around the village under study ? We will investigate what different organizational forms (e.g. factions, power and pressure groups, and political parties and regional cliques) are existent and how are they interrelated among themselves, and to those outside, as effective communicaton structures of what is called here the 'power management system'. The concept of faction will be examined in relation to, and as a part of, this wider political system. All along, through suitable case material, we will attempt to find out how and why (or what for) such changes are occurring at the village level, especially as in Gopalpur.

Gopalpur, the primary source of the data for this study[1], is a medium-sized (650), multi-caste (16), North Indian village, situated 23 miles due east of Lucknow, the capital city of Uttar Pradesh. (It is constituted of three hamlets : Gopalpur, Thakurpur and Rampur.) Regional information is provided by the neighbouring villages of Mohammadpur, Rahmatnagar, Salimpur, and the city of Sultanpur. The diachronic account (See also Khare 1962 a, b) is based on the data obtained with the help of the older informants, the *vāzibul-arz*, and the regional political and party leaders.

The following account begins with a brief summary of the relevant aspects of the 1935-47 political situation, continues to describe comparatively the 1959-60 pattern, and finally deals in detail with the 1962-65 power management situations. The discussion of the influence of party politics takes us to an assessment of the processual changes in terms of political structures found in Gopalpur.

Factional Village Politics

(a) Pre-Independence Period (1935-1947) : The Zemindary Period

During the early thirties, Gopalpur was divided into the two *pattis* (stretches of land) running north to south and belonging to two related Kayastha zemindars, one holding the north end and the other the south. The population of the village (then about 500) was divided into two pyramidal groups at the tops of which sat the two zemindars, jealous and quarreling between themselves The pyramid was composed of several caste groups, but at the base were those who either had annoyed their landlord or had been caught flirting with the group of the other zemindar. Hierarchy and insulations of the caste system were not infringed upon frequently. The man with land was the zemindar, and he was considered powerful He was socially unsurmountable. The most common mode of social control was to afflict the non-conformist tenants with economic sanctions over land, wages, or agricultural produce. Political resources concentrated in the hands of these zemindars. Dissent meant revolt, which, in turn, led to tyranny. In this connexion the tyrannical zemindar of the north is remembered even today. Whatever factional 'fights' were staged at that time, they were led and decided either by the zemindars themselves or by some of their influential kin. There was no organized lower caste influence.

During this period, the 'choice' of objectives, the nature of individual activities (with regard to the objectives), and the dynamics of interaction and affiliation (and thus the political arena itself) were all limited. Intercaste contacts and occupational structure were highly ascriptive and they curtailed any effort to seek dynamic affiliations, change of leadership, or diversification of motives. The economic resources were static, limited, and unevenly distributed along the bases of ascriptive hierarchy.

(b) Post-Independence Period (1958-60) : Reorganization of leadership

In 1958 when the village of Gopalpur was being studied intensively by me, it had come a long way from the 1935 situation. The zemindary system was abolished, meaning

redistribution of land among the landless, mostly lower-caste people. Zemindars were replaced by the elected panchayats. After the formation of the Indian Republic, the regular adult franchise on an all-India basis was introduced, and the village had been exposed to the general elections of 1952 and 1957; and through them the villagers had known of the 'new' system of gaining political power and prestige under which each and every individual, irrespective of his social rank, counted. Village panchayats and the regional panchayat *adalats* further brought home the concepts of individual votes, vote-winning propaganda and the resultant 'chosen' leadership. The avowed Congress policy of establishing a 'casteless' society was significant for the lower caste people of the village who were numerically dominant and had so far remained maltreated.

As a result of all these changes, the two power pyramids described for the thirties were almost completely reorganized by 1960. Actually, the northern pyramid led by the northern Kayastha zemindar (KAN) collapsed completely due to the static and unadaptive leadership provided by its erstwhile zemindar. The southern counterpart fared better, though its zemindar leader (KAS) had to join hands with a powerful Kurmi group (KUI) and other smaller multicaste cliques, for example, the Pasi *bhakta* (PS)—Pasi *shakta* (PS)—Brahmin (B)—Kumhar (K)—group, and the Mallah (M)—Mali (ma)—Dhobi (D)—Chamar (C) group. Being Arya-samajist and educated in the University he could disown, at least partly, the traditional rules of caste distance in order to win the good will of those whom he had mercilessly governed in the preceding decade. This Kurmi-Kayastha (KUI-KAS) alliance had its basis in economic resources. The lands of its leaders were side by side. Their mango-groves were adjacent, and they had common irrigational sources and drainage systems They had survived consolidation of land-holding operations of the Government. They held influential positions in the panchayat.

Immediately after the Zemindary Abolition, the lower caste people of Gopalpur organized their caste groups *against* the

ex-zemindars. The Kurmis of the North and certain Pasi families of the South actively participated. However, it was a temporary sequel to the zemindar's tyrannies. Yet, from the point of view of studying the formation of new leadership, this 'exercise' of the lower caste people was most important. It had a salutary effect on the ex-zemindars ; it was indicative of the 'new' times. Some individuals, so far insignificant in the eyes of the villagers, began to emerge as 'men of power'. In the interest of their followers, these leaders took up the task of solving conflicts through common and unified action. They organized around and across ascriptive groups. Even in this early stage, some people showed up as better judges in regard to the decisions about action (and emerged as 'policy makers') and some others as better organizers. What I was observing in 1958 in Gopalpur was of course the result of those decompression processes that intensified and continued all along the decade of 1947-57. In 1962, the village again found itself in the fanfare of the general election ; this time it was neither politically uneducated nor uninitiated. It confronted 'party politics' and its campaigns at its doorstep.

Entering Extra-village Party Politics (1962)

The term 'party-politics', as used here, refers to those political activities, interactions and ideologies which find expression in different political parties, especially during the general elections, and which maintain a regular political organization, expressing opinions on public issues and getting place among representative bodies. Such parties are formally recognized by the Election Commission of the Government of India. 'Party in this sense of the "party-in-the-electorate" is an amorphous group, yet it has social reality' (Key 1964 : 164). Party politics, as in any other formal and complex organization, demands extensive, rather than face-to-face, activities. The interaction is diffused, dispersed, and impersonal, motivated and channelized by political exigencies but rooted in an abstract body of ideology. There is greater unpredictability between the expected and the actual effect of a political action. Since the arena is so wide and the resources so diverse and

dispersed, political acumen remains the only guide for assessing and interpreting a constituency. Experience is found as a great educator.

Many such factors came to the attention of Gopalpur political elites when they had occasions to visit their party leaders' camps in Gosainganj, Haidergarh, and even in the town of Sultanpur.

In the beginning of 1962, ten important Gopalpur leaders of five different castes had initiated a month-long contact with 27 'party' workers of the region. By the end of 1962, when the village was revisited the village leaders showed more sensitization towards party politics, while the general configuration of different factional groups remained largely unaltered. Two significant events were held to be responsible for such a change : the general elections of 1962, and the Chinese aggression of October 1962 (Khare 1964). As will be clear from the account given below, the intensive political contacts of the Gopalpur leadership, during the 1962 general elections probably set the stage for the political responses that attended the aggression crisis. The single most important shift noted in 1962 was towards an ever-increasing readiness to establish extra-village, extra-caste, and indirect political relationships with the regional politicians. I shall only briefly describe how it came about.

This trend was initiated through the 'good offices' of the leaders of another village (Rahmatnagar), who wielded power in the *Panchayat Adalat* of the area and who were more experienced in the regional politics. (During 1960, however, as I reported in 1962, Gopalpur leaders were not pleased with Rahmatnagar. Its politicians had reportedly discriminated them in the face of Mohammadpur, a neighbouring village, in seating their members to the *adalat*. In the intervening time, however, they came together again because of their common aspirations to establish contacts with other 'higher level' politicians, and to campaign for the same candidates for the provincial assembly.)

Rahmatnagar leaders were approached in October, 1961, through the Kurmi leader R and a Barahi leader S of the

Gopalpur factions. Once the Rahmatnagar leaders introduced R and S to the political party workers campaigning on behalf of a candidate, the Gopalpur leaders acted on their own, disregarding the importance of Rahmatnagar politicians. As a result, the leaders of these two villages once again fell out. During the same period, R and S fell out among themselves because R, representing the powerful southern faction of the hamlet of Gopalpur, and S, representing another faction of another constituent hamlet of Thakurpur, differed on how to handle their respective caste loyalties. R belonged to a multicaste faction of Kayastha (ka)—Kurmi (ku)—Pasi (PB and PS)—Brahmin (B), and S belonged to the one predominantly Barahi (Ba)—Kahar (Ka)—Kurmi group of Thakurpur, a hamlet of Gopalpur. Precisely, the faction of S disliked the idea of including and giving prominence to a handful of higher caste people (Brahmin and Kayastha) in Gopalpur politics. R, on the other hand, thought of it as the only pragmatic way to exploit their modern education and political know-how for entering into 'a wider arena of political power'. Kayasthas, as will be noted in the following discussion, looked at this situation in their own way. They found a subtle way to exert their influence and to manceuvre the erstwhile powerful lower caste leadership in favour of their own aims. The Kayasthas and the Brahmins, therefore, actually came closer than ever before for increasing their actual influence potential.

However, more important was the way these bickerings were conceived and handled by the leaders. The Rahmatnagar break-off was done, according to the leader R, 'to gain direct and undivided attention of the party politicians and their workers, and to exploit the crucial election work for our own political ambitious.' Along with some fifteen selected young men of his faction, R made direct contacts with the party workers of the region and after two months (January 1962) of apprenticeship under the Rahmatnagar leaders, which was thought to be a 'sufficient period to get acquainted with some party workers and their ways,' he broke off. However, the Kayastha leader (KAS) of R's faction was against such a hasty

step, but he was not heeded for the general distrust against him as an ex-zemindar. The Rahmatnagar leaders were naturally not happy over this sudden, though not unexpected, break-off; but they remained silent 'for their own tactical reasons'. When asked, one Rahmatnagar leader said, 'There was nothing better to do for several reasons'. His argument was that if they quarreled among themselves (i.e., the leaders of Gopalpur and Rahmatnagar), the party workers would discredit both of them as immature and unfit for higher politics as they kept their affiliations changing so frequently. Moreover, such an antagonism could affect the regional political strategy of the party with which the Rahmatnagar politicians had firmly affiliated themselves; and finally they had recommended Gopalpur leaders at their own initiative.

As a consequence, the split was incomplete and the leaders of Gopalpur and Rahmatnagar *separately* launched an intensive election campaign for the *same* political candidate. It was unlike the local factional politics, under which either one was united or disunited with a particular person or a group.

During the campaign Gopalpur leaders became involved in a complex range of organizational and political activities for the first time.

R recollected them intelligently and in some detail :

> 'We organized big processions, sometimes of 1000 persons, and visited villages far and near. Our campaign was spread over some twenty villages, located within a radius of seven to ten miles from Gopalpur. We started at daybreak for our political headquarters near Gosainganj and had our briefing then. As I am uneducated and illiterate, I kept a bunch of educated youths with me. They all belonged to our faction and were generally of the Kurmi, the Kayastha, and the Pasi caste groups. They helped me in understanding the written word—the pamphlets, the posters, the slogans, etc. But I held the ground when it came to speaking to counteract the propaganda of other party groups. We, however, had to talk of our successes and reverses in terms of the ideas that my

party workers told me. As the campaign became intensive, it was essentially the shouting of slogans and counter-slogans, parading streets and fields with colourful banners in our hands and party-badges on our caps, or on arms, or on chest. The slogans mostly came from the party office in Lucknow ; sometimes we coined our own. *Prajatantra* (democracy) and *Samajvad* (socialism) were the popular phrases, but largely foreign to us. However, my impression was that more work could be done by meeting and talking to the members of our own caste in different villages or to those who were our acquaintances. As the Kurmi and the Ahir dominate here, we were more confident in our efforts—a point also emphasized during our meetings in Gosainganj. Sometimes to satisfy the leaders, we had to exaggerate our successes, or had to assure them of our eventual success. Originally suspicious, the members of the other factions of Gopalpur also began to participate at a later stage.'

The above 'recollection' of a political elite of Gopalpur is a good indicator of local naivete as well as of the acquisition of a political conception.

In March 1962, I counted some twenty leaders who had directly participated in the campaign. They belonged to ten out of sixteen different caste groups that Gopalpur had. The six caste groups that did not participate directly were numerically small, and were following the lead given by the first group. Of ten leaders who actively participated, only seven had any schooling. One was a university graduate who was residing temporarily with his parents, as he was then unemployed. KAS, the old Kayastha leader of the southern faction, was a close consultant, although he preferred to remain in the background.

These leaders were followed by thirty young men of twelve caste groups. They regularly participated in the campaign and learned what they called the strategies (*chalen*) of the powerful. Later on, when the elections were over, these youths created an active group of 'power-seekers' (for an

enunciation of the concept, see Dahl 1963 : 63—64) within Gopalpur. They saw for the first time a 'different order of politics,' involving stabler political relations around long-term aims. Prestige and diverse effectivity of political influence attracted them, although its complexity and slow gains discouraged them. The exuberant village leadership, however, helped them not only from dropping out of the political arena, but in even spreading the 'contagion' to other ambitious youths of the village.

Against this background must be judged the response that the villagers[8] of Gopalpur had towards the Chinese aggression of October 1962. First of all, crisis was politicized around the conceptions of the political parties. The ruling Congress party was considered as inefficient. Secondly, the villages' reaction (see Khare 1964) was more 'open' to and inter-connected with the wider levels of democratic politics. Initially the aggression created the sentiment of national unity ; after the military phase, the same event was parochialized and politicized around party politics. The village politicians and their versions of the regional leaders' 'calls' accelerated the on-going process of deparochialization of the local political arena. Actually, Gopalpur's response lends empirical support to a hypothesis put forward by certain group dynamicists : 'high influencers have more influence during periods of crisis than during periods of noncrisis' (Hamblin 1962).

During the crisis itself, the village leaders acted as 'task leaders' and 'socio-emotional leaders' (see Bales 1952). Such a functional division of leadership during the crisis helped in forging social solidarity and surfacing the conception of nationalism. As a result, all internal factional quibbles receded into the background, and the task leaders, who would normally be high on both substantive and procedural influence, undertook the task of comprehending and learning the politics of a nation with the help of their extra-village political contacts.

Politicization and Stabilization of Political Groups (1963-65)

As the political heat generated over the Chinese aggression gradually subsided, and the political parties thought in terms

of a coming *Zila parished* or a *panchayat* (regional and local), or a bye-election, Gopalpur's politicians settled down to the demands of the local disputes. But it was with a difference. The leaders kept up a flair for exploring the regional politics. However, this 'higher politics' (a popular word with the Gopalpur leaders) and its allurements demanded from the village leaders that they acquire added organizational stability within the village, that they increase their following, and that they introduce long-range aims for political action.

In May 1963, when the factions were again studied, they still showed the cleavage between the Kurmis and the Kayasthas, the Kurmis and the Pasis, the Kayasthas and the Kumhars, and the Kumhar-Pasi-Brahmin clique and the Kurmis and the Ahirs. However, we must hasten to add that the reasons of these cleavages were not entirely the local disputes. Rather, they also conspicuously involved the idea of competition to acquire favours of, or to deal directly with extra-village political leaders, and to enlarge and consolidate one's following. This was, at least partially, acquired by emphasizing the enlarged sphere of (a) the reward power and (b) the referent power (for concepts, see French and Rowen 1962 : 612ff) of the political administrative leadership. In general terms, these mean (a) the promise or ability of leaders to reward, and (b) the ability of the participants to conform to or identify themselves with the group aspirations. Each of these reinforces the other and they form valid basis of any kind of political power. Accordingly, the Gopalpur leaders also promised rewards. Some of these actually rewarded those who helped them in keeping up factional unity. For example, they helped several members in getting their children admitted to city schools, and also in having patients hospitalized in Gosainganj or in Lucknow. Such acts, and more promises for future, attracted some of the ambiguous to join their camps. Their factional followers had thus different kinds of motives than only a temporary attraction for getting a conflict resolved.

Between 1960-63, there had been three noticeable changes in the organization of factions : (a) in affiliations of the

Kayastha and the Brahmin (the only representatives of high caste groups in the village), (b) in their independent contacts with external political sources, and (c) in reorganization of untouchable caste groups like the Chamar and the Dom. KAS group still maintained close contacts with all those with which it had contacts in 1960. But it now received more intensive support from the other smaller Kayastha groupings, including KAN, the long-standing rival ex-zemindar group of the north. The Kayasthas now lent their support only to the main KUI group. It had also bilateral support from the Brahmins, though not from the Pasis and the Kumhars. The latter had now only weak support of clientele, and had receded into the background (though it was this group which built the first masonry well in 1961 after a lapse of three decades). The Ahirs had strengthened as a caste group, and as active supporters of the Kurmis—probably as a sequel to the Kayastha (high caste) strategy.

Extra-village caste support was still available to the Kurmi, and lately also to the Ahirs, but not to the Pasis (though the Lucknow district has a preponderance of the Pasis as well). However, extra-village political affiliations (which normally means greater interaction with party leaders and participation in their political activities) were handled only by the leaders of KUI and KAS groups. Occasionally, they might distrust each other, but mostly they acted united.

Intensification of the above kind of intercaste alliances for achieving the diversified (politically achievable) goals set the stage for proliferating pressure-groups (for enunciation of the concept, see Key 1964). The emergence of these groups is mainly owing to the swollen rank of power-seekers (that is those who either were within the sight of getting power or were thinking of benefiting from their particular social position), which, in turn, is chiefly because of the enhanced instrumental value of the politics to them. Each power-seeker in these groups has some political resources to rely on, and has some valid basis to exercise pressure on those who are actually powerful. Power-seekers are active, ambitious 'go-betweens'. They communicate with effect on both the sides of hierarchy,

namely, the leaders and the groups to which they belong or owe allegiance to. They help vindicate those grievances which are bypassed by the leaders ; in turn, as power-seekers themselves, they help mould group opinions on certain issues so as to appease the leadership. These functions enhance their potential power, although their actual power is kept in balance insofar as they keep in check the power of their actual leaders.

Though the pressure-groups are organzied by the power-seekers, they give an additional, dynamic 'tool' to the leadership through which to channelize and resolve the factional conflicts. These pressure-groups take the steam off the disputes which could ordinarily dislocate the major power-groupings of the village.

Let me give an example. During the summer of 1965, the groups of the Kurmi, the Brahmin, and the Pasi as against that of the Kurmi and the Ahir fought over a grove of mangoes. The dispute was about the distribution of the two types of mangoes, one being costlier and tastier than the other type. One night certain Ahir youths climbed the trees and stole the costlier variety. The issue was hotly discussed in the factions of the village next day. It aroused strong feelings of the Brahmins and the Pasis, who took the matter to KAS. The Kurmis of this faction, however, preferred to remain silent, and this act was soon taken as an indication of their caste loyalties. The latter sentiment, argued KAS, if allowed to develop, could disrupt the multicaste power groupings of the Kayasthas and the Kurmis, surviving for the last seven years. Conscious of the 'unauthorized' stealing done by the Ahirs of their faction, the Kurmis were embarassed, especially those who were close to KUI. On the other hand, the Brahmins were pressing KAS either to bring this issue with KUI directly, or to withdraw his indirect support to the Ahir youths who were among the power-seekers of his group through the 'good offices' of KUI. The Ahirs came to know of the move and tried to ascertain the attitude of KUI through KU II, who were their closest relatives in the village. KUI was reported as displeased over the stealing of the mangoes. He wanted that the Ahir power-seekers of

his camp should persuade those who stole the mangoes to divide them equally between the two factions in the presence of KAS and the Brahmins. However, the stolen mangoes were not brought forth and tension mounted. As a sequel, two pressure-groups of PB and B and PB and PS emerged. They organized because of their own grievances and gains. For example, the Brahmins came forward because they were 'long aggrieved by the insolent behaviour of the Ahirs' (for another earlier example, see Khare 1962). Similarly, PB as close political associates of B also volunteered but they became divided in their opinion—one sub-group favoured pushing the matter, as the Brahmins wanted ; the other rallied around KAS and were against too much pressure on KUI on the 'petty' issue.

On the other side of the same faction, the Ahir power-seekers rallied around KUI, *underplaying* their caste and kinship bonds to those Ahirs who conspired to commit the stealing.

In order to resolve the situation, these power-seekers rallied more support among the members of their own caste group in order to put pressure on those who had committed the theft to at least go to KUI (who was their well-wisher) and privately accept the responsibility for the act. But again the Ahirs did not relent, because this would lower their prestige in the eyes of other groups as PB and PS and B. They reasoned, 'after all our Ahir bretheren are power-hungry and want to oblige KUI-KAS-B group by asking us to stoop before those who look down upon us'. At this stage, KUI with Ah I formed another pressure-group (stablilizer) to bring home the worthlessness of the 'wisdom' of making mango-theft a point of prestige primarily between the Ahir and Brahmin groups. The initiative for this group was provided by KUI, and along with it came a threat of not serving the social or political needs of Ah II, who were silently supporting the 'thieves'. This weakened the Ah II group significantly. For example, those individuals who were asking through KUI-dominated *panchayat* for a development subsidy for a well or a drain in their neighbourhood, and

those needing recommendation from KAS to see a city physician in Lucknow dropped out. Moreover, the older age-group did not want to offend those who had been helpful in the past. Although, initially different, it then came to be looked upon as a dispute of the youth groups. All of these pressures and counter-pressures had greatly weakened the Ah II group, and finally on the fourth day of the stealing, it was decided that some elders of Ah II should go to KAS's *chaupal* and return a portion of the stolen mangoes (more as a token of amity than anything else). The matter thus came to an end ; though behind the scene, Brahmins were 'jubilant' over defeating the designs of the Ahir, and the Ahir youths were proud of practically 'getting away' with the theft—a reminder of their political supremacy in village affairs.

The above conflict, though insignificant in terms of the material involved, is analytically important. It tells us about (a) the complex and indirect channels for the expression of factional power, (b) the caste-inspired, but interest-oriented motivational structure of the village political power, and (c) the rapid and effective communication along and across the traditional caste, kin and age structures. Within the major constellations of power, small groups exerting pressure on the leaders as well as on the common factional members, were formed to emerge, organize, and reorganize in terms of the task they were temporarily engaged in. It was done until they had 'taken off the steam of the issue' by their small-scale but intensive and effective communication network.

Factions and the Power Management System

Let us now see how the factions and the power-seekers and their pressure-groups compare in some of their organizational properties. Factional leadership and its power is legitimized largely in terms of the items in dispute and is expressed as such. Factional leaders may show greater bases of acquiring and exercising social power at one moment, but may lose much of it as soon as either a particular dispute is resolved or mishandled. Even the formal leaders as factional

leaders may exhibit this characteristic. Interaction within and between factions is task-oriented, limited in terms of the immediate conflict or its antecedents. Retaining, accumulation, and stabilizing power is *not* much of a pre-occupation of the factional leadership. The expression of power is incidental to the main aim of resolving community disputes. The main reason for such a state seems to stem from the interactional properties of the faction as a social group ; it is highly unstable as its motivations and activities are kept in constant flux, keeping individual and group interactions equally unstable.

However, the power-seekers, as has been exemplified above, organize, disband and reorganize pressure-groups in terms of (1) their own interest, (2) their leaders' interest, and (3) their group's interest (reaching even up to the village and regional level). By virtue of their structural position, the power-seekers contribute towards organization of conflicts and management of political power. Once, however, a power-seeker is able to legitimize his political influence or social power in terms of some popularly recognized bases (such as a bureaucratic position or a stabler group referent authority), he becomes powerful. When the latter consolidates his influence again and brings it to bear on internal as well as external political resources of the village, and has thereby acquired political acumen in the eyes of his village, he becomes a political elite. The latter manages the available political resources in such a manner that he is able to transform most efficiently the potential influence into actual influence.

As an example of the multifarious functions being performed by the southern group of Gopalpur (KAS—KUI—P/B P/S—B —K) in 1965 : Its members were quarreling over a mango grove, a pond, a brick kiln, and a *panchayat* radio ; its Kurmi and Ahir members were proceeding against a trans-river (Loni) village over some joint-family holdings of the past ; its power-seekers were organizing to snatch the remaining 'bureaucratic' (*panchayat*) positions from the weakened northern KAN group ; and its formal leaders and political elites, as already indicated, were trying to develop stable bonds with the party politicians at Gosainganj.

These groups, while discharging such diverse functions, may at one moment be organized across caste lines, but at another moment they may exhibit strong caste sentiment. This makes the situation more elusive, if one were to examine such groups only or even predominantly in terms of fixed caste and kin lines. The case of stolen mangoes, described above, illustrates this point with respect to caste. The latter is more viewed as an element of political expediency. It is not a universalistic basis of these political structures. It may be a necessary referent, but it is now no more a sufficient condition for the village politics of modern India. In the village, people do know who, though belonging to their own caste group, belongs to a different or opposed power-grouping. They know who are those who belong to more than one power-group, and for what apparent purpose. They also tend to identify a group member in terms of the scope or scopes within which he is supposed to be a most powerful, a moderately powerful, or a weak individual. Some others, who are politicians themselves, not only differentiate between different degrees and scopes of power, but also the degree to which a particular member can potentially and actually influence decisions, and can get influenced himself by others' decisions. All these considerations, in an actual situation, break down the variable caste of dominance (Srinivas 1959) in an increasingly complex manner.

The above-noted political groups of Gopalpur, along with their specific properties, interrelate so as to produce what we may call a 'power management system.' Sociologically, it behaves much like that of what students of modern organizations call 'tension management system' (cf. Moore and Feldman 1962). Thus, as we have seen above, tensions in one rank of factional organization are managed by the integrative devices set in motion by another intersecting political group.[4] Integration is acquired within the factions, the highly dynamic groups, by means of greater differentiation of the ranks and the roles of the participants, and thereby fostering among them functional interdependence. This, in turn, brings organizational stability among such political groups (cf. Parsons 1964 : 94 ff.). Thus, as in the case of stolen

mangoes, while the conflicting groups produce fission and press it upwards through the existing pressure groups, the political leaders use the power-seekers of these groups as communication structures to generate integrative devices to resolve the dispute without a major change in the existing inter-group affiliations. As an evidence, the multicaste alliances have survived in Gopalpur for a decade.

Under the power management system, factions appear only as an interrelated device for political actions. They are only one of the several other types of political groups now existing in modern village India. While factions have been interpreted as vehicles of rapid social and economic change (Epstein 1962, Berreman 1962), as a phenomenon of socio-cultural change adapting to accommodate the impact of external economic change (Siegel and Beals 1960), and as a socio-political process for organizing conflict (Bailey 1960, 1963 ; Nicholas 1965), they are found here as a type of communication structure for transvaluing the democratic politics for the village and for opening the local political groups for the regional complexities. Factions, like any other social group, respond to the external as well as the internal stimuli of change ; but they are themselves neither a 'dead-end' nor only a 'receiving end.' They are two-way communication units interwoven with various other political organizations.

This power management system is dynamic (as compared to a political party, for example). It is characterized by organizational plurality and motivational complexity.[5] It simultaneously explains the extra- and intra-village dimensions of the political arena, and it emphasizes *interlevular* social influence, interaction, and decision-making.

Conclusion

The political changes that are described above relate to both the organization and function of individuals and groups. These are found to be closely influenced by historical events, especially the political independence, the establishment of the democratic party—election system, and the abolition of zemindary system. By now it is a commonplace statement, except if we begin looking closely to examine how varied and

how far-reaching changes have been brought about by them in every village—a 'microcosm' of Indian democracy. For example, the presence and distribution of land, the available educational and economic resources, the political participation in the struggle for Indian freedom, and the antecedents of zemindary rule in the village and the region, among others, initially conditioned or catalyzed the entry and transvaluation of democratic politics in Gopalpur. Today, these villagers are comprehending the ever-widening instrumental value of political groups and their elites 'in order to be in step with the times'.

Related to the above political changes appear those that occurred in Gopalpur factional politics between 1952, when zemindary system was abolished and the first general election took place, and 1962, when the third general election was conducted, followed by the crisis of Chinese aggression in October of the same year. Multicaste factions were already operating in Gopalpur in 1960 (reported in Khare 1962), along with the extra-village political contacts. These and the ambitious political elites and their power-seekers opened up the village to the regional party politics. Such contacts were strengthened by the exigencies created by the political impact of the Chinese aggression. Still, in 1963, the organizational set-up of the political bodies of Gopalpur was unsuitable for any specialized and prolonged participation. The political contacts available to the village politicians as the regional party workers, and the KAS and KUI leadership's enduring intercaste alliance (by creating power-seeker's and pressure-group's communication structures) were the two outstanding factors that promoted the stabilization of factional group dynamics and the politicization of the factional leaders' activities within and outside the village. Gopalpur of 1965 illustrates this stage of transition only as a phase in the process of the opening up of the village's political microcosm. Obviously, this process involves the two-way tendency : the villages reaching out to understand and emulate the regional and national democratic politics, and the network of the latter approaching the villages and adjusting themselves to their political conceptions.

The preceding discussion also suggests how frequently and effectively the political groups now organize across the traditional structures. They emphasize as well as de-emphasize caste and other ascriptive loyalties, depending upon the strategy required for resolving a dispute or for pursuing a long-range political motive. Long political involvement is being tried out by the leaders of the village for the first time.

The above developments suggest how a political system of the modern Indian village is getting more suited for the complexity of democratic politics, especially by creating a multi-functional, stabler, broad-based, and better-differentiated power management system, of which the factions are only one organizational dimension. Consensus at one level now tends to balance conflict at another, without upsetting the overall political alliances. Now for the political leadership, strategy is more important than open dissent, and political prudence is regarded as more useful than factional bickerings.

NOTE

1. This paper is based on several field-trips made to Gopalpur since 1958 when it was chosen for a year-long study for my Ph.D. dissertation. The last trip was made in the summer of 1965. The major part of field-data for this study was collected during 1962 and 1963. It was first written during my post-doctoral stay at the University of Chicago, in 1963-64, as a part of the project that was partly financed by the Wenner-Gren Foundation for Anthropological Research. Later on during 1965-66, while teaching in Lucknow, additional field-material was included. The paper was rewritten in its present form with the help of the support provided by the Faculty Research Committee of the University of Wisconsin, Madison.

2. The term 'power' is used in a generalized manner. It does not differentiate between authority and rule, unless it is specifically required. Thus a *Sarpanch* (headman of the village council) is simply noted as a village leader.

3. Epitomizing the political consequence of aggression crises a Kurmi leader noted : 'It was for the first time that these extra-village political relationships were eagerly understood and sincerely explored'. Further, 'the village leaders expected to benefit by being initiated into a wider political arena...' One of the Gopalpur leaders even expressed an interest in becoming a candidate for the State Legislative Assembly in the next general election (which, according to the latest information, did not come about), using his newly established political connexions as the basis of his candidacy' (Khare 1964 : 1159-60).

4. Sociologists (e.g. Dahrendorf, and Eisenstadt 1964) and political scientists (e.g. Laswell 1948, Dahl 1950, 1961, 1963) are well aware of such a dynamics.

5. The determination of motives which make one join an existing political group in an Indian village is even more difficult. No single explanation is obviously adequate, whether it is termed as 'hostility' by Siegel and Beals, or 'self-interest' by Nicholas. I have alluded to this difficulty above. If the term 'hostility' refers to only one of the body of motivations or sentiments that social psychologists consider to be responsible for organizing a group, the term 'self-interest' creates problems with the interpretation of 'self', a problem apparent even to Plato. The notion of 'self-interest' is very complex (see Lasswell 1948). On 'self', Murphy (1954 : 625), a noted psychologist, observes : '...the self comprises all the precious things and persons who are relevant to an individual's life ...and the proposition that man is selfish resolves into the circular statement that people are concerned with the things they are concerned with'. In the foregoing discussion I have used the word 'interest' in a non-technical manner referring mostly to a configuration of motives ranging from the egoistic to 'collective' (clearly specified or only a generalized entity) gains, and from the expression of inter-caste or personal hostility and revenge to inter-group competition for gaining social prestige, reverence, fame, and security. The motivations underlying a political action would become more complex with the increasing emphasis on and the expanding scope of the instrumental value of politics for the common villager.

REFERENCES

Bailey, F. G.

1960 *Tribe, Caste and Nation : A Study of Political Activity and Political Change in Highland Orissa.* Manchester : Manchester University Press.

1963 *Politics and Social Change : Orissa 1959.* Berkeley : University of California Press.

Bales, R. F.

1953 The Equilibrium Problem in Small Groups. In *Working Papers in the Theory of Action.* T. Parsons, R. Bales and E. Shils, eds. Glencoe, III, Free Press.

Berreman, G. D.

1963 *Hindus of the Himalayas,* Berkeley : University of California Press.

Dahl, Robert A.

1958 A Critique of the Ruling Elite Model. *American Political Science Review* 58 : 463–469.

1961 *Who Governs ?* New Haven : Yale University Press.

1963 *Modern Political Analysis.* New Jersey : Prentice-Hall, Inc.

Dahrendorf, Ralf

1964 Toward a Theory of Social Conflict. In *Social Change : Sources, Patterns, and Consequences.* Amitai Etzioni and Eva Etzioni, eds. New York : Basic Books, Inc.

Eisenstadt, S. N.

1964 Political Development. In *Social Change : Sources, Patterns, and Consequences.* Amitai Etzioni and Eva Etzioni, eds. New York : Basic Books, Inc.

Epstein, T. S.

1962 *Economic Development and Social Change in South India.* Manchester : Manchester University Press.

French, Jr., J. R. P.

1962 The Bases of Social Power. In *Group Dynamics : Research and Theory.* Darwin, Cartwright and Alvin Zander, eds. Ill., Row, Peterson, and Co.

Hamblin, R. L.

1962 Leadership and Crises. In *Group Dynamics : Research and Theory.* Darwin, Cartwright and Alvin Zander eds., Ill., Row, Peterson and Co.

Key, Jr., V. O.

1964 *Politics, Parties, and Pressure Groups,* New York : Thomas Y. Crowell Company.

Khare, R. S.

1962a Domestic Sanitation in a North Indian Village : An Anthropological Study. Lucknow, University of Lucknow. Unpublished doctoral dissertation.

1962b Group Dynamics in a North Indian Village. *Human Organization* 21 : 201–213.

1964 An Indian Village's Reaction to Chinese Aggression. *Asian Survey* 4 : 1153–1160.

Lasswell, H. D.

1948 *Power and Personality*. New York ; W. W. Norton & Company.

Moore, Wilbert E. and Arnold S. Feldman

1962 Society as a Tension-Management System. In *Behavioral Science and Civil Defence Disaster Research Group, Study No. 16*. George Backer and Leonard S. Cottrell, Jr., eds. Washington : National Academy of Sciences, National Research Council.

Murphy, Gardner

1954 Social Molivation. In *Handbook of Social Psychology, Vol. 2*, G. Lindzey, eds. Cambridge, Mass : Addison–Wesley.

Nicholas, Ralph W.

1965 Factions : A comparative analysis. In *Political Systems and The Distribution of Power*. Michael Banton, ed., A. S. A. Monographs 2. London : Tavistock Publications.

Parsons, Talcott

1964 A Functional Theory of Change. In *Social Change : Sources, Patterns, and Consequences*. Amitai Etzioni and Eva Etzioni, eds., New York : Basic Books, Inc.

Siegel, B. J. and Alan Beals

1960 Pervasive Factionalism. *American Anthropologist* 62 : 394–417.

Srinivas, M. N.

1959 The Dominant Caste in Rampura. *American Anthropologist* 61 : 1–16.

BOOK REVIEWS

The Problems of Indian Society. *By Devabrata Bose. Foreword by Prof. P. C. Mahalanobis. Pp. ix+206. 1968. Popular Prakashan, 35C, Tardeo Road, Bombay 34 W.B. Rs. 28.00.*

This is a refreshingly written book on some of the problems relating to the caste system of India. The author has carefully gone through a large mass of literature on caste, but has been chiefly concerned with the problem of status, and how far it is related to racial or physical differences, wealth, birth, etc. His main conclusion is that the correlation between status and the factors enumerated above is not neat and uniform. He comes to the conclusion that the high status enjoyed by Brahmins, in disregard of racial differences or economic and political power, is more or less, due to the idea-system to which the Brahminical people of India subscribed. Within this idea-system, he identifies the Pollution Concept as being of significant operational value. This is very nearly similar to the thesis propounded by Prof. M. N. Srinivas. But, even here, the author is of opinion that 'a number of dominant castes violated these rules', yet apparently did not lose their ascribed status ; so that the concept of pollution cannot wholly explain the status enjoyed by a particular caste.

One point has apparently not been sufficiently taken care of in the present book, namely, the fact that caste-based economy (which, in intention, encourages the suppression of the competitive tendency in the productive system) still sustains the life of a large fraction of the people of India. Our modernized industries engage no more than 4% and household industries no more than 6% of the working population. This may possibly be one of the reasons why the ideological super-structure of caste has survived the ravages of time. Caste's economic organization actually held together the rural folk of India and helped them to survive (even if it were at a low level of comforts) through numerous political vicissitudes The question might legitimately be taken up for investigation if the loyalty to the idea-system (including the supremacy of Brahmins and the Pollution Concept) was itself not the result of the continuous allegiance to caste's productive organization.

But, of course, this may not have had direct bearings upon the question of *status*, as such. And therefore the economic elements in the social structure *may* have been disregarded by the author.

But there is another element which is directly related to status to which the author has drawn our attention, but has not done so to an adequate extent.

He has referred, particularly on pages 135 to 137, to the fact that the secular authority was somehow directly responsible for raising or lowering the status of some castes in various parts of India where an ancient form of kingship survived. In contrast, in the present phase of Indian history, many castes have been trying, on their own, to raise themselves by adopting various items of culture by which the upper or dominant castes are distinguished. The king's authorization of claims to superior status is no longer available. Many castes have have thus been described as involved in such an attempt. This has also been shown by authors like Marriott, Srinivas, and others. And on the basis of these contemporary observations, a picture has been drawn of the ideal character of the caste system, which, the present reviewer thinks, is somewhat off the mark.

To the present reviewer it appears that caste is thus being studied after several centuries during which Hindu society has continued to operate in a state of political anaemia. This would yield a picture of even the *ideal system* of caste under distinctly pathological conditions. It would hardly yield a picture of how caste grew up under more youthful conditions when the Brahminical people had political power to help them in their work of social expansion.

The reason why this digression is being made is that, in the book under review, there are chapters (4, 5 and 6) where a historical reconstruction has actually been attempted. This has been well done ; but the role played by the secular, political authority in the regulation of society has apparently not been given its due importance. The Brahminical concepts of purity or otherwise, which became more firmly entrenched when Brahminism was in retreat, have gained more importance than is due to them.

But these are observations made, not in disparagement, but in appreciation of the refreshingly objective quality of the author's enterprise.

N. K. Bose

Studies in the Society and Administration of Ancient and Medieval India. Vol. I : Society. *By D. C. Sircar. ix + 321. 1967. Firma K. L. Mukhopadhyay, 6/1A, Banchharam Akrur Lane, Calcutta—12.* Rs. 25.00.

Professor D. C. Sircar has collected together thirteen of his essays relating to various aspects of society in India during ancient and mediaeval times. The subjects are of a varied nature, ranging from 'Aryanism in Bengal', 'Foreigners and Non-Aryans' to 'Bride, Wife and Slave' and 'Some Great Women'.

Professor Sircar depends strictly upon unassailable evidence, largely derived from inscriptions, and partly also from literature, of which the date can be determined with reasonable accuracy. The author's description of how various non-Aryan communities were absorbed into the Brahminical system will be highly appreciated by students of anthropology. He shows how various *Jatis* were given a place in the *Varna* System by hypothetical, often fanciful, accounts of their origin.

N K. Bose

Paschimbange Puja-Parban O Mela, Dwitiya Khanda. *Collection of data and Ms. by Arun Kumar Ray. Revision by Sukumar Sinha. Editor Asoka Mitra. Census of India. 1961 : West Bengal, Volume 16. Part 7-B. 1968. Pp. 732 + Introduction, maps, plates etc.*

This book in Bengali forms a welcome addition to the series originally designed by Shri A. Mitra when he was in charge of census operations in West Bengal in 1951. It contains an account of the temples, shrines and fairs in the districts of Murshidabad, Nadia, Howrah and Hooghly. While presenting a description of sites located in each Police Station, the authors have also given us much of the associated folklore. Historical evidences have also been furnished from authentic sources in various cases.

It is obvious that numerous local inhabitants interested in the history of their own region have co-operated in this undertaking. It is perhaps only by encouraging local enquiry in this manner that a full descriptive account of life in rural Bengal can be eventually built up.

As a pioneering work, the present publication deserves adequate appreciation. There are a few small errors which, we are sure, would be removed in a future edition. This can be done more

easily if scholars take more interest in such publications, and help the editors by sending in there suggestions.

N. K. Bose

Needed Social Science Research in Population and Family Planning. *By Reuben Hill, Edwin D. Driver, Moni Nag. The Ford Foundation, New Delhi, 1968.*

This is a highly organized academic report on the needs of sociological research on population problems with which birth control, camouflaged under the term family planning, has been tagged on. The authors probably desire that researches on birth control or family planning should also be carried out in the sociology departments of Indian Universities. Professor Srinivas is right in pointing out that there are no 'major concepts in the field'. He is perfectly justified in saying, 'Intellectually, this does not interest me at all and unless such research is related to my main intellectual concern I cannot take any interest in family planning research.'

The trend of the first session centred round Dr. Som Nath Roy's concern on the lack of 'basic knowledge of the Indian family' of our administrators or policy-makers. It is however extremely unfortunate that there was not a biologist or a gynaecologist in the conference, who could have suggested that human mating system, at least in some North European countries, is gradually taking the form of seasonal breeding from that of continuous breeding (not of statistically significant difference, of course) and that natural selection is playing its role in population control. The gradual early maturity of city girls may thwart all attempts of birth control, just as in U.S.A., illegitimate births have increased in 1962 nearly three times above the 1940 number and that syphilis has doubled between the years 1956 and 1963. The reviewer wonders why in a highly literate country the above frequencies have not decreased in spite of the many contraceptive devices. It wlll be of interest to record here that during the visit of the three consultants in Calcutta, the girls of a Home Science College in the city, who have long been protesting against having a family planning centre in their campus, succeeded in getting it removed.

A gynaecologist at the symposium would have given valuable information (just as Dr. John Rock did at the Massachusetts symposium on Human Fertility and Population Problems in 1963) on evaluation on which there has been so much discussion at the conference.

Family planning is an unscientific term. With an average of only 12-24 hours of fertile period in a menstrual cycle, it is not easy to plan a conception. It camouflages the rather explicit term *Family Limitation* so efficiently used by the British Royal Commission on Population in their report by Lewis-Faning (1949). How does family planning in its present form help families to get rid of hereditary defectives, malformations, etc. ? A gynaecologist would have been helpful to inform how birth control practises at the early age of the mother is raising the frequency of caesarean operations, uterine fibroids, etc,

Drs. Hill, Driver and Nag did not probably seek for such experts because of their psycho-social leanings, but they are certainly aware of Lorimer's work on fertility.

On page 20 they have sought for an answer to the question :

'Does the postponement of marriage until the age of 25, for example, decrease fertility or merely increase the span of reproduction ?' Lorimer (1954, p. 56) is of opinion that 'postponement of marriages until women are 24 or 25 years of age...tends to reduce the level of fertility by 25 per cent, more or less, below that expected....'

On the same page 'additional factors' for differential fertility have been sought for. The role of congenital diseases, malformations, etc. affecting the fertility of both sexes has not been taken into account. And unless such biological approaches are made, family planning in its true sense will not succeed as a science. As it is being followed in this country, it is nothing short of coercion or monetary incentives to the illiterate, while the literate probably gain a better insight from Bertrand Russells's *Marriage and Morals*. Is it not fair to have a sperm count of the man before he is sterilized ? Does he possess the actual sperm concentration favourable for fertility ?

The present reviewer does not deny the need for a sociological approach, and here again Lorimer has offered the key. Dr. Nag in one of his studies pointed out that in all societies women are always more prone to adopt limitation of children than men, and in this the present reviewer agrees with him. Why then so much coercion to induce the illiterate woman ? If they could be induced to go in for abortion, and it is well known that older mothers go in for it more than the younger ones, why not for birth control ? The present

reviewer is of opinion that all such practices should have the secrecy of coitus. Much of the lure of birth control has been lost through mass propaganda as is being done in this country. The quacks, openly advertising abortificients in spite of the Drugs and Magic Remedies (Objectionable Advertisement) Act, 1954, have long gained their foothold.

The three consultants of the Ford Foundation have rightly stressed upon Research into consequences of family-planning practices. Nothing so far has been done by the Government of India. They say: 'In their haste to solve the world population problem the proponents of family planning have chosen sides on this issue of the consequences of family planning methods without asking for much documentation. Some surprises may be in store for these advocates when the studies of the social psychological consequences which are here suggested have been concluded.'

Professor Notestein has elsewhere pointed out that '50% of women are happy and successful' with the present methods of birth control in spite of their being 'less than perfect'. But as already mentioned the rise of illegitimate births and syphilis do not support more use of contraceptive devices. Birth control, as it is being preached in this country, is harmful to the nation's body and soul. We must stop for a while and evaluate what has already been done during the past two decades.

S. S. Sarkar

An Omission

The paper entitled 'A Note on the Sociology of Buddhist Tantrism' by Malati Shendge, published in *Man in India*, Vol. 49, No. 1, pp. 24-29, was originally presented at the seminar on 'Urgent, Research in Social Anthropology' held at the Indian Institute of Advanced Study, Simla, on 15-20 July, 1968. It was printed with the kind permission of the Director of the Institute, Professor Niharranjan Ray, to whom our thanks are due.

—Editor—
Man in India

MAN IN INDIA

VOL. 49 | JULY-SEPT. 1969 | NO. 3

THE TRIBAL SITUATION

N. K. Bose

Abstract : There is a difference between the way in which the tribal communities of India came into contact with their economically advanced neighbours in the past and are doing so today. The new conditions of massive and rapid confrontation with communities speaking other languages, and having a different way of life, has given rise to many of the problems facing the tribal people. Yet, the Constitution of India offers a solution to these problems if it is worked in the right way.

THE tribal people of India, that is, those who have been listed as Scheduled Tribes, number nearly 30 million in a population of nearly 440 million. If the Scheduled Castes are also taken along with them, then the total comes up to nearly 100 million. This is a little more than the population of Japan ; but, in our country, this vast number is scattered all over the country. On the whole, it can be said that the Scheduled Tribes are poor ; live in the hills and forests in comparative isolation, where they have not become mixed up with other peasant communities in the plains. But even in the latter case, they occupy a rather lowly place in the social hierarchy.

Some social reformers are of opinion that economic development provides the key to human happiness. According

Speech at the Indian Institute of Public Administration, New Delhi, on 16 January 1969.

to their recommendation, if roads are opened in tribal areas, agriculture and industry properly developed, then our task will be done. But let us remember that, although economic prosperity is a very desirable thing, by itself it will not be able to bring about social equality. Social equality has to be established by specific programmes designed for its own sake.

Let us look at the condition of the U.S.A. The United States have an area of nearly three times that of India. In contrast, the population is 41 per cent of our country's population. The U.S.A. have enormous natural resources; its people are well educated, hard working; and they have been able to assure a standard of living to every one of its citizens which is far above that attained by other countries in the world. Yet, when it comes to human relations, we find unhappily that there are divisions between the White and the Negro, between the rich and the poor, which result in various kinds of tensions and conflicts.

The implication of this example is that, while, in India, we should take recourse to every method of raising production, we should, at the same time, try to reduce the gap which exists between town and country, and between the classes and the masses, if we are to use terms made familiar to us by Gandhiji himself. Both the programmes of economic development and of the establishment of social equality must be operated as an integrated whole.

In India, the 'tribal' people and those who are designated as 'civilized' have been in contact with one another for many centuries in the past. In some extraordinary places like the Andamans, there are tribal communities who live in complete isolation and live exclusively by hunting, fishing and gathering. But the total number of such completely isolated people would be perhaps four or five hundred only. By their means of production, such communities can perhaps support no more than three or four persons on every square mile of land; although by means of cultivation, animal husbandry and better methods of fishing, more than 200 people could be supported on every square mile of land in the same area.

Then there are some portions of India, where tribal communities depend upon shifting cultivation, without the use of the plough, or animals for traction. In N.E.F.A., Nagaland and some of the more isolated parts of Orissa or Assam and Madhya Pradesh we come across tribal communities of this kind. Some observations have been made about these people, and it has been found that, at their best, they can support from 20 to 30 persons per square mile by means of the technique of cultivation and food production known to them.

It is interesting that in both N.E.F.A. or the Mizo Hills district of Assam the actual density of population is lower than the number which can be supported by shifting cultivation. But in the district of Keonjhar in Orissa, where one section of the Juang tribe lives by shifting cultivation, the problem is very acute. While only 20 or more people can be supported by shifting cultivation, the actual number living on each square mile of land which was investigated, was in the neighbourhood of 70. The Bonda Poroja or the Koya who live in the district of Koraput in Orissa are likewise in a deplorably poor condition. It was discovered by a team of medical men in one school in this area that 98 per cent of the children suffer from hookworm and anaemia ; while, among the adults, the incidence of tuberculosis is as high as 2.4 per cent.

It is under such conditions that many of our countrymen live. The schemes of economic development organized by the Government do not often reach these lowliest of lowly people. And yet they have to live, and find a solution for their problems as best they can.

In ancient times, these tribal communities did come into contact with the neighbouring peasant and artisan folk of the plains and river valleys. They were often attracted by the comparative prosperity of the latter. In many cases, the tribal folk specialized, after such contact, in the production of goods based upon the resources available in their forest dwellings, and sold them to the peasant folk for money, or bartered them for paddy or millets.

After such contact, which deepened in course of time, some

families among the tribal people also learnt or adopted better methods of cultivation, and even began to worship some of the gods and goddesses worshipped by their more prosperous neighbours. In course of time, their neighbours, who lived under the caste system and were served by Brahmin priests and teachers, adopted them as a caste within Hindu society. It was however unfortunate that the caste to which the absorbed tribal folk were relegated was generally a lowly one, except in the case of a few ruling or prosperous families who were regarded as Kshatriyas.

Formerly, as we have said, one person, two persons, one family, two families came into contact with their Hindu neighbours; and in course of time became attached to the Hindu economic system, and then were absorbed within the social fold also. The tension between one section of the people and another was hardly of a serious nature; because none was very poor, and none very rich. Moreover, while the tribal folk were attracted by the gods and goddesses of the Hindus, the latter, on their part, quite often adopted the gods and goddesses of the tribal people as well. Even after social incorporation, the tribal people could continue to worship their earlier gods and goddesses without let or hindrance.

It was in this manner that the ranks of the Brahminical people became swollen. The cultural distinction between the absorbed and the absorbing communities also tended to become indistinct on account of mutual give and take. There was however no intermarriage between various groups which made up Hindu society. So that although distinctnesses were preserved through the rule of endogamy, yet distances between different elements were not sharpened.

The picture that we have drawn above is, of course, a simplified outline, and it belongs more or less to the past. But what is happening today in India is very different from this; and we shall now try to present a simplified picture of that also.

In contrast to what took place in the past, the contact of tribal people with the dwellers of the plains and plateaux is

taking place on a massive scale. New roads are being built in all parts of India, mines and factories are being opened in the heart of the isolated areas formerly inhabited by tribal people or peasant communities, from whom they do not differ very seriously. But, today, when a steel mill is opened in a place like Rourkela or a mine as in Balimela in Orissa, the tribal folk are suddenly brought face to face with a technology which they do not understand. Moreover, when, in order to work these industries, labourers are brought in from Bihar, Andhra Pradesh or Madhya Pradesh in large numbers, the tribal people see the sharp difference between themselves and the new-comers in a way that they had never experienced in the days of slow infiltration in the past. The language, costumes, ways of life of the new-comers who work in the mines and factories are new, and the tribes become increasingly conscious of their difference in all respects from the culture of those who have quickly intruded into their homeland on such a massive scale. The cultural polarity between the two contrasting communities tends to become sharpened under the present situation ; whereas, in the past, the slow process led to progressive reduction of the cultural contrast.

This increasing consciousness of contrast leads the tribal people to preserve their own identity and distinctness by an overvaluation of some of the items of their own culture. When they are not completely swamped over, or widely scattered under the stress of the industrial economy, they tend to seek their own solidarity by over-emphasizing those elements of their culture which mark them off from their neighbours.

The same thing happens to Indian emigrants in America. Unless they are completely americanized, they tend to hold on to their Indian-ness with greater fervour than they ever do at home.

When the tribal people are driven into a revivalist spirit towards their own culture in this manner, there also develop certain important political results out of it. When the tribal communities feel that they are being thrown out of their established economic security, and set adrift to adapt them-

selves to the new industrial system as best they can, they feel injured, and by and by begin to think of what they should do under the circumstances.

Fortunately for us, it was largely under Gandhiji's inspiration and advice that the Constitution of India adopted adult franchise as the foundation on which to build up Indian democracy. Slowly, the tribal folk are becoming more and more conscious of their new political power, particularly when they are approached by various political parties for votes. They also have begun to realize that, through a reservation of seats in the State Legislatures and the Parliament, they can now make their voice heard before the rest of their countrymen.

So that through the massive nature of the contact to which tribes are subjected today, and through access to political power under the Constitution, the situation which has arisen in the matter of relationship between the tribal and non-tribal people is of a radically different kind than what it was ever in the past.

Meanwhile, one has to remember that India has set its mind to the establishment of equality of opportunity in the economic, political and social fields through democratic means. Our old caste-based productive system still thrives in large parts of India in a modified form, while a new economy, based on modern technology and guided by the ideal of equality, is slowly taking its place. Social change, in the past, has been very unequal in different parts of India, and also unequal among different classes of the population within the same area. And those who have been least subjected to the processes of adaptation to a modern economy have been the Scheduled Tribes and the Scheduled Castes.

Most of the problems by which India is faced today, most of the tensions to which India is also subject, can be traced largely to this inequality of social and economic change. However difficult our task may be, India is determined to face the challenge, and progress towards her accepted goal.

Just as a mother who has several children devotes more attention to an ailing child or one that is weak, in the same

manner the Constitution of India has provided that it will look with greater care, and spend proportionately more money and give more services to those communities which have so long been lagging behind.

It is from this point of view that we must look at the problems which beset our brothers belonging to the tribal communities. If we realize the experiences of comparative isolation in the past, and their massive confrontation by a completely new economy which has come into the land, when we realize that they have been neglected in education and economic development, we must learn to appreciate their sorrows and difficulties. And we must also face the challenge, and take upon ourselves the responsibility of wiping out the distance that separates the Scheduled Tribes and Scheduled Castes from the rest of the Indian community within the shortest practicable time.

It is then only that India can rise to the glory with which Gandhiji dreamt of endowing our land.

THE PARATAVAR : 2000 YEARS OF CULTURE DYNAMICS OF A TAMIL CASTE

CLARENCE MALONEY

Abstract. This article studies the changes that have come about in the Paratavar caste over the last two thousand years. This caste engages in fishing and trading on the southern Tamilnadu coast. Classical Tamil literature and other sources suggest how the caste was formed. Five different phases of acculturation can be traced, involving five major religions. The conclusions are that from an ethno-historical viewpoint, caste in South India is an adaptive, responsive, dynamic social institution.

IT is possible to make ethno-historical studies of certain castes in South India covering a time span of two thousand years. Tamil literary sources go back to the Sangam period, the first three centuries A.D. Because the literature of this period has not been subject to significant interpolation in the succeeding centuries, the origin and development of the institution of caste in the Tamil country can be determined with less speculation than for most other parts of India. The two major Tamil epics are literary sources for the early mediaeval centuries, and there is a large body of religious literature from later countries. The development of institutionalized caste in the Tamil region was much like that in the rest of South Asia. Some modern scholars, projecting into the past their currrent views of how society ought to be, deny that there were castes in the Sangam period. However, whether or not the word 'caste' is used, it is obvious that ancient Tamil society was subdivided into a large number of groups into which a person obtained membership by birth. There are dozens of castes mentioned in Sangam literature,

Clarence T. Maloney, Ph. D. is Associate Professor of Anthropology, Evangel College, Springfield, Missouri 65802, U.S.A.

such as Maravar, Malavar, Palaiyar, Aruvalar, Oliyar, Kadambar Velir, Brahmins and Paratavar. Many are obviously geographical and could be thought of as tribes or minor dynasties, but others are occupational, such as smiths, carpenters, fishers, and warriors.

This propensity for society to be divided into multifarious endogamous units is the raw material from which formal caste hierarchy was constructed all over India. This has been a pan-Indian feature from before Aryan influence down to the present, and the phenomenon does not require apology by anthropologist or historian. A reliable and datable literary source for studying these sub-sections of society before they became highly stratified in a hierarchy supported by religious authority, is classical Tamil literature of the first three centuries, particularly that classified under the category of *puram.*

Until recent years, anthropologists have concentrated on the study of castes as discrete, fixed, social units. This predilection stemmed in part from the need of British administrators to categorize people in manageable units, and these were then perceived as relatively clear-cut, fixed social entities, each with its status established. A study of particular castes in the Tamil region for two thousand years will confirm what several anthropologists are today stressing : that caste is a dynamic system. Far from stifling culture change, caste may be shown to have at times abetted change, because a segment of the population is free to change without being bound by the norms of the population as a whole. This is true historically, as well as in the context of modern politics and economics. As merchants, Brahmins, Mulsim traders, and Europeans successively tried to solidify the existing castes into a hierarchy favourable to themselves, differential acculturation was inevitable. The direction and rate of acculturation of each caste or group changed with each successive intrusive influence in South India, most of which appeared first along the coasts.

The Tamil caste selected for this study is the Paratavar, who live today on the southern coast of Tamilnadu. Literary

references to this caste can be traced back about two thousand years. Sections of this caste have tried to emulate the ways of life of successive dominant cultural currents that have washed over the southern Pandiyan coast. Five phases of the culture dynamics of the Paratavar can be identified. They first became acculturated in the direction of the Indian Great Tradition and Brahminism, and, secondly, in the direction of mercantilism and the Cettis. Thirdly, they succumbed in part to Muslim influence, and fourthly to Portuguese Catholicism. Now they are being acculturated anew by the prevailing forces of modern Indian society. Here is an example of caste as a dynamic institution.

The Tamil Paratavar are found today all along the southern coast of Tamilnadu, and some are in north-western Ceylon. They are also found in coastal regions where other languages are spoken : Simhala, Malayalam, Tulu, and Kannada. The core of the caste, however, is found in coastal villages from Cape Comorin to beyond Ramesvaram. These people are generally thought of as fisher folk, but the Tamil Paratavar engage in considerable commerce and shipping.

The modern name is Paravar, but in literature they are referred to as Paratar. Tamil scholars have postulated an etymology for this word, deriving it from *paravai*, 'something expansive' or 'sea'. This is a fanciful derivation, for the caste is mentioned in Tamil Sangam literature about forty-six times, and in every instance it is Paratavar except two, which have it as Paratar. Therefore the word is from *Parata* (the final *r* being the human plural suffix, the *va* a euphonic infix, and *Paravar* being a modern contraction). *Parata* is the Tamil rendering of Sanskrit *Bharata* and Prakrit or Sinhalese *Barata*. The opinion of some scholars to the contrary, this caste must have taken its name from Bharata, even though they are fisher folk.

Epigraphical data from Ceylon show that Bharata was a prestige title in the island in the third to first centuries B. C. Many Buddhist caves were donated by persons bearing this title, whose names are memorialized in early Brahmi script over the caves. Most of these are around Anuradhapura and

Mihintale in the north of the island, but some are in the south-east also.[1]

The names of these individuals bearing the title Bharata are generally Hindu names, such as were common to the proto-Saivism or early Hinduism of Ceylon. Some of them (in Ceylon Prakrit form) are Barata Mahatisa, Barata Sumana, Barata Utara Kasaba, and Barata Ahali. Usually the title *Bharata* is shortened to *Bata*, found with names such as Abaya, Upasona, Vahaba, Siva, Devatisa, Sivaguta, Citaguta, and Tisabutiya. There were also some Buddhists with this title, including Budarakita, and Damaguta.

These were persons of high social standing. The word *Bharata* here may be translated as 'lord'. Two of them were reciters of scripture, two were *theras*, and two were *gahapatis*. The high status of these people can also be inferred in that they were able to donate caves to religious orders, thus emulating the king and his family.

None of these individuals is specified as a Tamil, but an inscription in Anuradhapura reads, 'The terrace of the Tamil householder caused to be made by the Tamil Samana (residing) in Ilubarata'.[2] Nearby is a large platform, with post-holes in rock, and the names of six Tamils are inscribed behind, each above his section of the excavated rock terrace. The names are Prakrit, not Tamil, which indicates an early response by Tamils to forces of culture emanating ultimately from North India. Ilubarata is not identifiable, but if an affluent Tamil lived there, it is likely that the title Barata was used and regarded by Tamils as well as by the Simhalas. We know from several other inscriptions of about the second century B. C. that there were Tamil merchants, ship captains, and religious figures in northern Ceylon at that time ; indeed, one of these six Tamils who used this terrace is specified as a ship captain.

The Pandiyan dynasty originated on the southern coast of Tamilnadu, as did the basic elements of civilization of the early Tamils (civilization being defined as including urbanization and literacy). The first two capitals of the Pandiyas were near the mouth of the Tambaraparani River, on the Gulf of Mannar. The Pandiyas were established there in the fourth

century B. C., Tamil civilization having developed on that coast due to the cultural stimulus of early Indian coastal sea traffic. The Pandiyas moved their capital inland to present Madurai by the second century B. C. because of fear of invasion from Ceylon. These points have not been much discussed in standard works touching on early South Indian history, but there is sufficient evidence to believe that the Pandiyan dynasty and its traditions originated on the southern coast, opposite Ceylon.[3]

The original Tamil civilization of the Pandiyan region developed largely as a result of early cultural influences originating in Gujarat and Sindhu, which impinged on the whole coast of peninsular India and Ceylon. The Pandiyan dynasty was a collateral of an early line of Pandu princes of pre-Buddhist Ceylon. The name Tambaraparani had its counterpart in the name of Tambapanni, earliest known city of the island, and these two early capitals were on opposite sides of the pearl-rich Indo-Ceylon straits. The name of Madurai, capital of the Pandiyas, was taken from Mathura of the North, which name was also found in early Ceylon. There are many other parallels between the two dynastic traditions. The Paratavar claimed to be Kshatriyas and thought of themselves as associated with the Pandiyas, but at the same time they seem to have had close relations with early Ceylon, as their own traditions relate. It is not coincidental that they took the prestige name *Bharata* about the time that this was a popular title in Ceylon, in the third and second centuries B. C.

Thurston relates the traditions of the Paratavar regarding their own origin. They claim to have come from Ayodhya, and were of the race of Varuna. Their main deities have been Varuna, Karttikeya, and Siva, rather than the indigenous Tamil deities worshipped by inland people such as the Velir in Sangam times. The Paratavar say that at the close of the last *kalpa*, when the whole earth was covered with a deluge, they constructed a boat, and by it escaped the flood. When dry land appeared, they settled on the spot where their boat (*toni*) rested, which place they called Tonipuram.[4] The credible elements of this tradition are that the dominant core

of the Paratavar originally immigrated to the Pandiyan coast by ship, and that the caste essentially revered the Indian Great Tradition and all its appurtenances going back to north-western India.

There are many other traditions connecting this caste with Ceylon. Even today, the Paratavar say that when the Simhalas came to Ceylon, one branch of them settled in the island, and another branch settled on the southern Tamilnadu coast and became the Paratavar. The main errors in this are that such traditions overlook the fact that immigrants are generally very few in number compared with the local people who were absorbed into the new tradition or caste, and secondly, the belief that the original Simhalas came from Bengal, whereas it is known now that they came from the west. The latter error was precipitated by the Ceylon Buddhist predilection for the east, and by the volume of ship traffic along India's east coast during and after Mauryan times. The Paratavar have a saying, 'Simhala people are like our people', and this appears to have some truth to it, even as regards physical features. The Indian Paratavar can marry the Paratavar of northern Ceylon, as well as the Sinhalese, and they also use some vacabulary borrowed from Sinhalese.

Turning now to the early literary evidence, we find that the Sangam poems of the first three centuries contain many references to this caste. Superficial reading of these references may lead one to suppose that the Paratavar were only a very low fishing caste, in contradiction to the above traditions. This literature describes the Paratavar children as having unoiled hair and wearing green leaves.[5] Their miserable villages on the sandy coast, where stinking fish are laid out to dry, are contrasted with the finery of the lover-hero of the poem, who comes in a chariot, and is from a venerable town which has shops on the streets where many carts stand.[6] The Paratavar go out to sea before daybreak in boats with upturned ends, and catch fish by the aid of shining lights.[7] They are physically strong as a result of their fishing work, and like strong liquor.[8] They plant in the sand the sword of a sword-

fish, and revere it.[9] After a day's work they are happy, and play around ; they also sing.[10] The maidens are so attractive that they are caught by the eyes of a visitor as fish are caught in a net.[11] In Sangam literature they are often mentioned in connexion with idyllic scenes of the coastal country, a rustic and happy people.[12] This is a literary convention of the period, and should be read as such rather than as objective description.

We get a different picture of the Paratavar from other passages. We see that some are well-to-do merchants and shippers, and live in fine coastal cities. They fish for pearls and conches, and market them, controlling this industry.

Glittering pearls from the roaring ocean,
Conch bangles cut straight to the eye, and filed, and
Many other good products are handled by Paratar ;
From black lowland plots sour tamarind, white salt, and
On mounds on the wide beach, by strong-armed boatmen
Fat fish sliced in pieces like eyes on a drumhead ;
These are taken by captains of fine ocean vessels
To distant foreign countries—also gems that are bartered
For horses, and other things brought in abundance.[13]

Thus, the Paratavar not only traded in pearls and rare right-whorled conches, but also in cut bangles, tamarind, salt, fish, gems, and horses. They tended their horses carefully, because they were imported, feeding them white rice flour floating on curds.[14] They also imported from some place north a sort of round white stone, and sandalwood.[15]

The Paratavar were also a military force of some importance. On one occasion they came from the south and threatened the Colas at the same time that the Colas were besieged by the Telugus.[16] They had their own 'king', who had an army of spearmen, and who lived in the port town of Kalar. But some of them lived at the important port of Korkai, and sung praises of the Pandiyan king, whose viceroyalty it was.[17]

Tamils were in the horse-importing business since 200 B.C. or earlier, according to both inscriptional and literary evidence from Ceylon, and Sindhu horses were highly valued in that

island well before the time of Christ.[18] South India has imported horses from the Gujarat and Sindhu coasts throughout recorded history, because the climate of the South is not conducive to the breeding of these animals. Monarchs residing in the inland capitals of the Pandiyas and Colas relied on such commercial castes as the Paratavar to import horses for them. According to one classical poem, the east coast Paratavar were famous for the fine horses which they imported from the North :

Enter Nirppeyal port's boundary. There milk-like
White maned horses arrive, with riches from the North,
In ships standing out in the cool ocean by the sea-front.
On sandy roads stand high-storeyed buildings
Of numerous Paratavar, occupying many streets,
And towering great warehouses which workmen guard.

* * * * *

There a tower, a pillar holding up the heavens,
Its summit reached toiling up a leaning ladder,
High terraced, without thatching, scrapes the sky.
At night its kindled light shows to approaching
Vessels groping o'er the deep, the shore.
They pass the port by and go on their way.[19]

Thus, the chief citizenry of this port (perhaps identifiable with Mahabalipuram) were Paratavar, who not only imported horses and valuable goods from the North, but maintained high-storeyed houses, great warehouses, and also a lighthouse.

How is it, then, that this caste is portrayed so often as poor fisher folk living in miserable villages, whereas at the same time some of them were townsmen and prosperous importers? For one thing, most of the *puram* poems of the Sangam literature are set in one of five types of landscapes, of which the sea coast, *neytal*, is the setting here. Each landscape is associated with a particular aspect of love, a tree, a flower, a bird, a season, and a characteristic people, which in the case of *neytal*, is the Paratavar. This literary convention might have been formalized even before the Sangam poetry we possess was written. However, it seems that the poems mentioning the

Paratavar as living in mansions and conducting far-reaching trade, were apparently written during the latter part of the Sangam period.

In any case, we have here an instance of caste as a dynamic institution at this early period. The original fisher folk, who served as the poetic idyllic type, were politically and economically dominated by an immigrant group into which they were eventually assimilated, taking the name of Bharata, and forming a new caste. No doubt an important attraction in this case was control of the pearl trade. If the Ceylon epigraphical material presented above is relevant, and if their own traditions have any validity, the core immigrant group had some connexion with Ceylon, as did the Pandiyas also.

This type of social process was repeated every time a new dominant cultural element washed the Pandiyan and Cola coasts. Throughout India this type of social change has been the norm rather than the exception. Acculturation was not always in the direction of Sanskritization ; in this case, it might be called Prakritization. In this example, we see caste as an adapting, responsive, social institution, a mechanism for facilitating acculturation.

K. A. Nilakanta Sastri refers to what he calls 'dynastic drift' to explain the appearance in India's south and east, of dynastic names and traditions which originated in the north-west. In the same way, there has been a drifting of caste names and traditions, so that specific castes are found over very large areas. A large transfer of population is not implied, but a new social unit can form around the nucleus of a very few intrusive individuals, who provide a prestige name and a pattern for acculturation. The process is the same for a dynasty and for a caste, for those taking the names Pandiya and Bharata. The coastal fishermen of the south were particularly vulnerable to intrusive influences because the strongest influences in the early historical South and Ceylon came by sea. The formation of these coastal fishermen into the Paratavar caste was the first of five distinct stages of acculturation. In subsequent centuries some of them took

up the traditions of Cettis, later some as Muslims, then as Catholics, and now as citizens of modern India.

The Paratavar must have begun forming as a caste a century or two before the time of Christ, since it was spread along much of the Tamil coast and was quite diversified by the time of Sangam literature. Moreover, the second century B. C. was the time when the popularity of the title Bharata as seen in Ceylonese inscriptions, reached its apex. Probably it was in the early second century B.C. that the Pandiyas moved their capital inland to the present site of Madurai,[30] which would have left room for the political and economic development of the Paratavar along the coast. The chief port of the Pandiyan coast, according to Sangam literature, was Korkai, at the mouth of the Tambaraparani. There were numerous Paratavar living there, and it was the centre of the pearl trade. Because of the wealth of this port and because of the pearl trade, it was the seat of the Pandiyan viceroyalty.[31] About half the references to Korkai in the classical literature mention it in the context of adulation of the riches of the Pandiyan king at Madurai.

Though South India has had few castes that claimed to be Kshatriyas, because the four-class system was not very successfully superimposed, the Paratavar imitated the Pandiyan dynasty by claiming Kshatriya status. Thurston's article on the Paravar records that they eat only with Brahmins because they claim to be Kshatriyas of the Pandiyan line. They also claim to be of the Lunar Race, as do the Pandiyas. Tradition says that the Sangam poet Nakkirar was a Paratavan (perhaps because the two earliest Pandiyan capitals together with their literary academies, were supposed to have been on the southern coast). The Paratavar worshipped the deities of the Indian Great Tradition, which were the same as those generally revered in pre-Buddhist Ceylon, whereas, according to Sangam literature, most of the Tamll people worshipped indigenous deities not yet well assimilated into formal Hinduism. Varuna, Karttikeya, Siva, Manu, and the palmyra palm (also revered in pre-Buddhist Ceylon) were the deities of the Paratavar (though in mediaeval centuries

they also took up the worship of such popular Tamil deities as Kannaki and Mangai). Varuna, lord of the sea, has always been popular among them because of the occupations they pursued. It is claimed that Minaksi, consort of Siva and chief deity of the main temple of the Pandiyas at Madurai, was born as the daughter of a fisherman chief. The deities and traditions of the dominant elements of the caste were superimposed over the beliefs of the indigenous fisher folk who were absorbed into it.

A new pattern of acculturation of this caste may be observed to have occurred on the Cola coast in mediaeval centuries, which culminated in the assimilation of the Paratavar into Cetti castes and the consequent disappearance of identifiable Paratavar fishermen along that coast. The *Cilappatikaram*, oldest of the two epics as they stand, has a number of references to Paratar and Paratavar. It shows them to have been the dominant trading caste in the port of Kaverippattinam ; the poem opens with a description of the prosperous city in which the rich Paratar are prominent. Their sons mingle in the streets with princes. The hero of the epic, Kovalan, had the name Paratar, which he gave up after he went to Madurai ; significantly, he was born of a merchant family. However, the Paratavar are also portrayed in the epic as fishers living in hamlets, employing small boats and nets in their trade ;[22] so we get the same disparate picture of them as we do from Sangam literature.

By the seventh century the merchant Paratavar of the east coast had become absorbed into, or evolved into, Cetti castes. Cettis took their name from Pali *setthi* (ultimately from *sresthin*), a money-lender, banker, or trader. The Buddhist Pali works mention *setthi* traders who came to the South by sea, and also refer to the Cola port of Kaverippattinam. The *Manimekalai* describes this great port, and indicates that Buddhists flourished there in early mediaeval centuries ; it also refers to Cetti traders. This epic is of Buddhist inspiration.

The influence of Buddhism was strong because of the heavy ship traffic between Bengal and Ceylon, but as the Colas became economically aggressive as a Hindu power, the

Paratavar who had become Buddhists apparently reverted to Hinduism. The modern Nattukkottai Cettis, prominent merchants of the central eastern Tamilnadu coast, claim to be descendants of the prosperous merchants of Kaverippattinam. They have long since shaken off the stigma of association with Paratavar fishermen. Many of the latter also seem to have been identified with other castes, and those who are still acknowledged to be Paratavar, as at Nagappattinam, actually prefer to call themselves Cettis, even though they may not engage in commerce. They feel equal to the Cettis of the towns, and refuse to give their daughters in marriage to fishermen of other fishing castes, such as the Padaiyacci.

On the Pandiyan coast, however, the Paratavar retained their identity as a caste, and were able to form their own strong commercial and political establishment. Though a few individuals here also are known to have taken the name Cetti, on the whole, Brahminical aspects of the old Paratavar traditions were emphasized. They had their own 'kings', often under the hegemony of the Pandiyas. Their capital at one time was Mangai, now displaced by the neighbouring town of Ramanatapuram. One of their ports was located near Muttupettai at the mouth of the Vaigai River, and one may pick up from the ruins there pottery fragments of Persian, Arab, and Chinese origin. The prosperous descendants of those merchants can be seen today in coastal towns such as Kulasekarappattinam, Virapandiyappattinam, Tirucendur, Korkai, Kayalpattinam, Mukkur, Kilakkarai, and Muttupettai. These towns on the pearl-fishing beds of the Gulf of Mannar carried on trade with distant points on both sides of the Indian Ocean. Under these conditions, there was no felt need for the Paratavar merchants to undergo a metamorphosis of caste, and there was no need for emulation of a new or intrusive set of ideals.

By the thirteenth century the Arabs were trading in all parts of the Indian Ocean, and the ports at the extremity of the Indian peninsula and in Ceylon were frequently visited by them and by Indian Muslims, who established their commercial empire in Malaysia and Indonesia. Moreover, the Delhi

Sultanate began to impinge on the South in the thirteenth century, and in 1311 Malik Kafur invaded the Pandiyan territory, causing Sundara Pandiya to temporarily abandon his capital, Madurai. Though the Pandiyan kings maintained a palace at Korkai on the coast, as they had done for centuries, they failed to defend the town. (The ruins of the 'palace' can be seen at Korkai today, in the matrix of which are many shell ornaments, mediaeval coins, and beads.) Before the forces of Sundara Pandiya rallied and repulsed the Muslims, Malik Kafur's army had raided Korkai of most of its jewels and valuables.

The appearance of the apparently superior economic and military strength of the Muslims set in motion a new direction of acculturation among some of the Paratavar. They could not really compete with the Muslim traders because of the wide geographical expansion of the Muslims. Even local trade with Malabar and Ceylon came to be dominated by Muslims with their more efficient navigation techniques. Some of the Paratavar found it expedient to adopt the cultural appurtenances of this new force, and became Muslims. There was also intermarriage between resident Muslim merchants and Paratavar women. As the old port of Palaiyakayal at the mouth of the Tambaraparani silted up, a new town of Kayal was established as a Muslim town, as it is today.

Though the Paratavar fishermen and some of the traders remained Hindu, those who perceived it was desirable to put on the trappings of Islam then developed a complete new mythology which superseded all the Hindu traditions of Bharata, Varuna, and the Kshatriyas. According to this new mythology, Ceylon was the original Garden of Eden, evidence of which is that Adam's Peak is located there. When Adam fled from the Garden, he came across to India by the chain of sand-bars called Adam's Bridge. Tamil, of course, was the original language of the Garden of Eden. If further proof is needed that the setting of the early events of Genesis was in this region, one can see the tombs of Cain and Abel a short distance from Ramesvaram, a spot that has since been corrupted by association with the Hindu myth of Rama and

Sita. Noah escaped the Flood in a *marakkalam* ('wooden ship') hence the name of the Muslim merchant caste of Marakkalarayar, who are directly descended from Noah. Even the Muslims in Kashmir use wooden ships as a result of these events. After this, Tamils went by ship and settled in Calcutta, Malabar coast, South-east Asia, and other distant coasts. Later Solomon visited South India by ship and gave his name (Suleiman) to Citambaram (Chidambaram). Solomon imported South Indian gold and peacocks, hence he had a peacock throne. Ophir, Solomon's source of gold, is Korkai, on the Tambaraparani mouth.

This mythology, adapted from the Arab Muslim Great Tradition, enabled those Paratavar who adopted Islam to disassociate themselves from the poor Paratavar fisher folk, and helped them acquire the status and economic benefits associated with the strongest cultural force yet to appear on the southern Indian coast. Whereas the caste of Paratavar on the Cola coast had largely been absorbed into other castes, those on the Pandiyan coast now split into two castes, Muslim and Hindu.

A new phase of Paratavar history began after the Portuguese established themselves in Malabar and began offering competition to the Arabs or Muslims for control of the sea trade. Many of the Hindu Paratavar found themselves dispossessed of their traditional trade routes, their fisheries and especially their pearling monopoly. They therefore deputed some of their leaders to Cochin in 1532 to persuade the Portuguese to help fend off further Muslim encroachment. The emissaries found it expedient to become baptized by the Vicar-General of the Bishop of Goa, who gave them Portuguese names. The Portuguese then dispatched a ship and some troops, who successfully halted the economic oppression of the Paratavar by the Muslims.

Priests who accompanied the Portuguese succeeded in baptizing numbers of Hindus in the Pandiyan coastal villages. In 1542 Francis Xavier arrived in Tuticorin, and though he did not speak Tamil, he memorized enough prayers and creeds in the language to minister, and visited over thirty Paratavar

villages which he found along the coast from Cape Comorin to beyond Ramesvaram. The entire Paratavar caste in these and other villages then became Catholic.[28] The new religion stuck in spite of attempts by the Dutch to convert them to Protestantism after gaining control of Ceylon ; for by this time the Paratavar were prosperous, managed their pearl markets well, and had trade contacts with much of the Indian coast as well as with distant points of the Christian world.

Roman Catholicism was superimposed on the Paratavar Hindu beliefs in ways paralleled by the successful propagation of the Iberian religion in so many other parts of the world. Indigenous deities became Catholic saints, the traditional sacred spots became sites for churches, and lucky symbols such as the conch shell continued to be venerated. A new Great Tradition had been adopted, replacing the Pandiyan-linked Hindu mythology. All the converts adopted Portuguese surnames, which they retain to this day. Most of those who claimed the Hindu Paratavar traditions wilfully gave them up in favour of the new Iberian mythology, setting in motion a new direction of acculturation which has provided many of the ideals of the folk of the coastal villages for over four centuries.

Within the last few decades the Paratavar have been subjected to a different set of acculturating forces Though they pride themselves on their Portuguese nomenclature and Catholic faith, it is obvious to them that a new set of values determines the status of the group today : obtaining an education, building houses with cement, and acquiring mechanized fishing boats. As usual, the poorer fishing segments of the caste continue to take their cues from the richer merchants whose fine houses may be seen in the coastal towns, oblivious that this is the fifth major change in the direction of acculturation of that caste in that region.

In conclusion, the Paratavar 'caste' was originally formed by the merger of diverse trading and fishing groups, then split several times, and lost large segments as new castes were formed and sections changed status in caste hierarchy. Four great religions were successively taken up, each with its Great

Tradition, and there have been at least five abrupt changes in the direction of acculturation.

One reason why many earlier anthropologists failed to give proper attention to caste as a dynamic institution is because they did not acquire knowledge of the literary historical sources regarding the people they studied, such sources generally having been left to the ruminations of scholars specializing in the humanities. Unfortunately, people are still studying villages, castes, and other social units with the tacit assumption that these are static social entities, that caste is discrete, and that such studies retain practical relevancy for decades. But the kind of change documented here for the Paratavar is also evident from the study of recent metamorphoses of other castes or groups, such as the Nadar of southern Tamilnadu, the Vellalar of Tanjavur, the Nayar and the Ilavar of Kerala, and the Thakurs and Chamars of Uttar Pradesh.

Generalities about caste spread in Europe and America have produced the impression among people with superficial knowledge of India, that the Indian social pattern retards culture change, that rigidly demarcated social units form a fixed hierarchy, and that India cannot 'progress' until this system is weakened by urbanization and anonymity. Those who desire to implement social and economic change, however, might do well to ponder how they might best take advantage of these qualities of responsiveness, adaptability, and dynamism characteristic of certain castes. The segmentation of society, so characteristic of the Indian scene, can facilitate the kind of change considered essential today, because a segment of society can respond to cross-cultural currents more readily than a homogeneous society as a whole can change.

REFERENCES

1. *Epigraphia Zeylanica*, V, Part 2 (1963), pp. 210, 219, 236–247, 252; C. E. Nichols, 'Texts of the Brahmi Inscriptions in the Ruhuna National Park,' *JRAS*, *Ceylon Branch*, New Series, II, Part 2 (1952), pp. 126–140.

2. S. Paranavitana, 'Tamil Householders' Terrace, Anuradhapura,' *JRAS*, *Ceylon Branch*, XXXV (1940), pp. 54–56.

3. This viewpoint is further supported by the author of this article, in *The Effect of Early Coastal Sea Traffic on the Development of Civilization in South India* (dissertation, University of Pennsylvania, 1968).
4. Edgar Thurston (ed.), *Castes and Tribes of Southern India* (Madras, 1909), VI, pp. 140–155.
5. *Pattinappalai* 90–94.
6. *Narrinai* 4.1 ; 45 ; 87.8 ; 219.6 ; *Kuruntokai* 320.1.
7. *Pattinapalai* 112.
8. *Purananuru* 24.4–5.
9. *Narrinai* 199.6 ; *Kuruntokai* 304.4.
10. *Porunararruppadai* 218 ; *Narrinai* 239.?.
11. *Kuruntokai* 184.6.
12. *Ainkurunuru* 195 ; *Akananuru* 350.
13. *Maturaikanci* 313–323.
14. *Akananuru* 340.16–17.
15. *Akananuru* 340.16–17.
16. *Purananuru* 378.1–4.
17. *Akananuru* 350.11–13 ; *Maturaikanci* 144.
18. *Mahavamsa* 21.10 ; 23.71 ; 31.39. The rock terrace in Anuradhapura referred to above, has inscribed the name of a Tamil ship captain.
19. *Perumpanarruppadai* 319–344 ; 446–451.
20. Of the sixty or more short donative cave inscriptions in Tamil Brahmi script, the majority are found on rocky outcroppings in the vicinity of Madurai. These are palaeographically datable to the third to first centuries B. C., most being perhaps of the second century B. C. It is likely, then, that Madurai was both the literary and political capital of the southern Tamil region by that time.
21. *Cilappatikaram* 27.127–135 ; *Narrinai* 23.6 ; *Ainkurunuru* 185.1 ; 188.2.
22. *Cilappatikaram* 2.2 ; 5.158 ; 6.143 ; 7.29 ; 7.38 ; 23.154.
23. Simon Casie Chitty, 'Remarks on the History of the Parawas,' *JRAS*, IV, 130–134 ; Thurston, VI, 140–155.

SOME FISHING COMMUNITIES OF WEST BENGAL

Bikash Roy Chaudhuri

(Received on 13 July 1968)

Abstract : The author makes some observations on marine fishermen and fish-traders in a southern district of West Bengal.

Fishing units

THE fisherfolk, as we find them at present in West Bengal, may broadly be divided into two categories, namely, fishermen and fish-traders.

The marine fishermen are headed by different leaders, known as *bahardars* among East Bengal refugee fisherfolk and *manjhi* among the fisherfolk of West Bengal proper. They return home once in a fortnight during low tide when the volume of catch decreases. They recruit their crewmen from different villages either on share or on salary basis for the fishing season from October to February when the sea is calm.

The fishing units are mostly caste, kin and village or neighbourhood based. This feature is more persistent in the case of share-based units than those on salary basis. This may be due to the fact that interpersonal reliance becomes necessary to run an enterprise on the basis of joint share. The fishing units who dry the fish make their temporary shelters near the fishing grounds and live there during the whole of the season. But those who sell off fresh fish do not make any such shelter on the shore. They live on the

The data were collected from Frasergunj, Bakkhali, Jambu Island, Namkhana, Kakdwip and Diamond Harbour in the district of 24 Parganas during 1967–68 in connexion with The Marine Fisherfolk Project of the Anthropological Survey of India, supervised by Shri B. Mukherjee.

The author is highly indebted to Dr. S. C. Sinha for his kind guidance and valuable suggestions in preparing this paper.

boat itself. But these groups beginning as contractual units tend to develop a cohesive moral order in such transient societies. It may also be noted in this connexion that, due to their long association with the sea, the marine fisherfolk have developed a perfect knowledge of their environment.

The Fisherfolk

The fishermen are mainly the Rajbangshi, Dhibar, Bagdi, Malo, and Kaibarta (Jaladas). Some of these castes are also involved in fish trade, particularly in the trade of fresh fish. Among the fishermen, the Malo, the Rajbangshi and the Bagdi mostly deal in fresh fish and the Kaibarta in dried fish.

The types of nets operated by these two classes are distinct. Those who deal in fresh fish operate the gill net or hook and line which allow them to keep the fish fresh. The Kaibarta who operate bag nets (*bindi* or *behundi)* cannot take out the fish caught in the net from time to time. They have to wait till the end of the tide or ebb when the whole net is pulled over to the boat to remove the catch. By that time the whole catch becomes a lump due to severe currents of the sea. Some of the Rajbangshis and Dhibars also operate small bag nets and are engaged in drying their catch on a small scale, unlike the Kaibartas who do it on a large scale.

It is worth mentioning here that the Dhibars are mostly engaged in operating smaller bag nets, the size of the meshes of which is also smaller, to dry red shrimps (*rangi-chingri*). Due to the smaller size of the meshes these nets give considerable resistance to the continuous flow of water. Therefore the opening end of the net cannot be increased to give more passage to the inflow of the fish and the current of water.

It appears that those who are involved in drying fish on a large scale are economically better off than those who sell fresh fish. This is so particularly in the case of the leader (*bahardar*) of the fishing unit, whether operating with shared or salaried men. In the case of a share-based unit, the *bahardar* gets an extra share for his net or boat, if he supplies them.

East Pakistan refugees : It appears that fishing in the open sea and drying the catch on a large scale has grown largely after the partition when fisherfolk from East Bengal migrated in large numbers to India. This can be traced from a study of the development of the *Jadan* system which has been described later on.

It is obvious that marine fishing can generally develop in coastal districts, provided the fishing grounds are in its proximity. Unfortunately in West Bengal such districts are not abundant. Southern Sundarban (24 Parganas) seems to be a fertile fishing ground. But that area has been reclaimed only a few decades ago and is very thinly populated. As such, marine fishing cannot flourish much in West Bengal except in the coastal parts of Midnapore, where there is a substantial population of fisherfolk in the hinterland. In contrast, the fisherfolk of Chittagong and Noakhali, due to the favourable ecological set-up, had developed the art of marine fishing very much in their natal districts. Even as refugees settled in India, they are following their accustomed calling although they have become settled in different parts of West Bengal, Bihar and Orissa under adverse ecological conditions. A large number of them are also drifting into 'non-caste occupations' like rickshaw-pulling, either as a part-time or full-time occupation.

It is important to note that the fish trade, that is the marketing of fish, was controlled by one section of local Muslims, known as the Nikari, who are economicaly well off. It may be noted that one section of the Nikaris is gradually taking up catching fish in creeks with small bag nets. They dispose of their fresh catch. Of course, thereby they have lost their social status and now form a separate endogamous unit.

Now-a-days, some high-caste Hindus are also coming into the fish trade, particularly, in the the trade of fresh fish. Some Bihari Muslims are also involved in the fresh-fish trade. But strikingly enough, not a single Marwari capitalist, who dominate the business enterprises of India, has come into this field.

Some fresh-fish trade centres : Let us see the actual situation in some of the fresh-fish trade centres of the district of 24 Parganas.

(i) Fraserganj.

There are 5 agents or *atdars* (Bihari Muslim—1, Bihari Sahu—1, Bengali Muslim—1, Bengali Mahishya—2).

(ii) Namkhana.

There are 6 agents (Muslim—3, Kaibarta—2, Kayastha—1) of the 3 financiers or *mahajans* of Calcutta.

(iii) Kakdwip.

There are 18 agents (Bengali Hindu—17, Bengali Muslim—1) of 18 *mahajans* of Calcutta (from Sealdah, Patipukur, and Howrah) belonging to different castes.

(iv) Diamond Harbour.

There are 9 Bengali Hindu financiers.

Dry-fish trade : If we look into the dry-fish trade, it is seen that the whole market is under the Muslims of Kerala who have their headquarters in Territy Bazaar, Calcutta. Only three or four such Kerala Muslims are the main financiers who advance money under the *dadan* system through some agents of Uluberia (Howrah) or Seoraphuli (Hooghly). These agents receive commission for their services, and they are mainly local Rajbangshis with a few Kayasthas and Muslims.

For transporting the dry-fish boat from the fishing ground in southern Sundarbans to Uluberia, the main centre of the dry-fish trade in West Bengal, the Paundra Kshatriyas and Mahishyas, who are numerically dominant, play the most important part. Some of the agents or *aratdars* are the owners of modern means of transport, like motor lorries. But the drivers are non-Bengali Hindus.

The dadan system : Almost all the team-leaders (*bahardars*) (both for dry and fresh fish) are caught under the *dadan* system. Under this system the capitalists float money through their agents to different team-leaders 'free of interest'. But the team-leaders are to supply the catch of the whole season to the agents of their respective *mahajans* who manage to extract exorbitant profit out of it as follows :

(i) The team-leaders get Rs. 6 to 20 less than the prevailing market rate per maund or 82½ lbs.

(ii) The team-leaders have to give 42 kg. or sometimes even more for a maund of dry fish.

These capitalists also have a sort of association or some conventional obligations by which one capitalist abstains from advancing money to any team-leader till he repays the whole amount borrowed last year. It is also quite frequent that the capitalist can hardly realize the whole amount floated as *dadan* every year from the team-leaders. But it is customary for the capitalist to carry over the balance to the next year.

Chain of middlemen: On account of the need of regular supply of fish to profitable market centres, various types of middlemen have emerged and they have a great chain organization.

The whole fish trade is finally controlled by a few capitalists of Calcutta. They have hardly any direct contact with the actual fisherfolk or their team-leaders. These capitalists have various types of agents or sub-agents (*aratdars*, etc.) some of whom are in direct contact with the team-leaders, while others are engaged in different stages of its operation like transporting, supply of ice, etc.

In short, the system of the trade operates as an organic whole. Each one has a specific function, the breakdown of which is bound to disturb the whole chain.

The primary producers in the chain, that is, the fishermen themselves, gain only a just-above-subsistence return for their labours. In contrast to even poor cultivators, they do not own the primary tools of production, and are more firmly under the stranglehold of the financiers than farmers who are under the village money-lender.

While the production end of the chain is virtually limited to the traditional fishing castes, the rest of the chain is manned by people belonging to a wide range of castes and communities. There is, of course, a tendency towards monopolistic specialization by some particular communities or groups even in this sphere.

Some suggestions

The main problem of the marine fisherfolk is to secure cash to meet the huge expenditure (minimum six to seven thousand rupees for an established fishing unit) during the fishing season. As has been pointed out earlier, to meet this expense they are forced to take the major amount from financiers under the *dadan* system. The rest of the amount is secured from other villagers, friends and relatives at high rates of interest which varies from 25% to 144%. Under these circumstances, they are always in a state of insecurity in spite of their hard labour. As such, if any possible measure can be evolved to remove the *dadan* system from the field of the trade, the fisherfolk can flourish in West Bengal and earn a decent living.

In view of the field situation at Frasergunj and in its vicinity, like Jambu Island, the help of the Directorate of Fisheries, Government of West Bengal, may profitably to utilized. This department has one of its stations at Frasergunj which also procures dry fish from different team-leaders on cash payment and finally sells the collection in Calcutta. Now, the possibility of advancing loans to the team-leaders before the fishing season on condition that they are to supply their catch at the then market price may be explored by the departmental authorities. At the outset, this may at least be tried on an experimental basis in spite of some amount of risk.

THE GREAT ANDAMANESE TODAY

V. K. Kochar

(*Received on 31 May 1968*)

Abstract : The author presents an account of the Great Andamanese as they are today.

NO publishd information is available about the present-day remnants of the Great Andamanese. In view of great curiosity and misinformed ideas about them, emerging partially from earlier anthropological accounts (Kochar 1968), I am giving here some general information about the remaining Great Andamanese as they are today (1966). This information is based upon casual interviews with and visits to some Andamanese living in and around Port Blair during my stay at that place in 1964-66. I had no occasion to conduct any regular field-work among them. The note below is compiled from the cursory information that I was able to gather through occasional contacts with them.

The present remnants of the Great Andamanese, counted in 1966, number barely 34 souls : men, women and children. They altogether represent six sub-tribes, mostly belonging to North and Middle Andaman Islands originally.

Aka Jeru	=	14
Aka Kora	=	12
Aka Buaro (Bale ?)	=	4
Aka Bo	=	2
Puchukwar	=	1
Aka Chere (Chari ?)	=	1

I counted them by name and location, including women and children associated with Burman households and half-

The author was an Anthropologist serving in the Anthropological Survey of India. His personal address is P50 Golf Club Road, Calcutta – 33.

castes. This may be the reason of discrepancy between my figures and the 1961 census figures (19 only). Since Andamanese eagerly claim them and attribute them appropriate sub-tribal and descent status *vis-a-vis* other Andamanese, I have included Andamanese women and children in Burman households in my enumeration. Eighteen persons lived in 1965 at Pipaldera and Naunaria hamlets near Memyo village in South Andaman, where an improvised kind of communal hut in a bad state existed. Four persons lived in the house of a Burman in Memeotara hamlet in South Andaman. Six persons lived in Port Blair town itself. There are 3 persons in Laltikri outpost in Baratang Island and 3 in Long Island. These include seven persons with known marital links with Burmans.

Sex and approximate age-group distribution of the present population is as follows :

Male			Female			
0 15	16–35	36 and above	0–15	16–35	36 and above	Total
8	2	8	7	4	5	34

The proportion of children to adults is not discouraging ; but 6 out of 15 children included here belong to an Andamanese woman living with a Burman. The proportion of effectively procreating adults, however, is very low. The population covers 7 married couples only (excluding one woman living with a Burman). Seven persons (adults) are widowed or divorced and 13 are unmarried. One adult female is half mad and wanders around in Port Blair.

All the Andamanese now speak a corrupt form of the *Aka-jeru* dialect as common language. Some older persons of other tribes, such as Loca, perhaps do remember their original dialects, but there is no opportunity for them to use it. Many adults of the younger generation of other tribes have forgotten their original dialects because the *Aka-jeru* dialect has been in common use for the last 50 years or so.

Most of the male adults (7 out of 10) are employed as forest-guards, bush-police or constables. Bush-police is a special

branch of the Andaman police deputed to patrol the fringe of the hostile Jarawa territory. One of the persons has recently moved to Jirkatang outpost in South Andaman. Some adult males, especially the elderly persons living near Tirur, still depend upon hunting, fishing, collection of shells and various other objects for sale or barter. For this purpose they often attach themselves to Burman households in Memyo or Tirur as servants or menials. Most of the Andamanese are chronic addicts to opium and some indulge in drinking. They procure these and other necessities like tea, sugar, tobacco, cloth, rice, etc., by barter or by serving as menials. Persons living near Memyo sometimes come to Port Blair when they can afford to pay bus fare and live with the Andamanese family at Port Blair. The addiction to opium, wine and tobacco has often led the Andamanese to odd corners and subject to pressures of various sorts. Indebtedness to Burman patrons is a frequent result of these addictions. A few Andamanese have also been sentenced to jail for illicit possession of opium. Maro at Port Blair divulged that the parents of young girls are thus forced to give their daughters to Burmans in marriage or concubinage. The Jero women, it is said, used to 'marry' Burmans more frequently. Kota's father was a Burman. Konmu, now married to a Burman, was the daughter of a Burman father. Loka, who is also known as 'Raja, is perhaps the oldest living male today. His present wife was previously attached to a Moslem convict.

Only one child goes to school. Two other children (of Kota from Jirkatang) were brought to school, but they have left. The children of the Burman father also attended school for a short period ; but the father was more interested in stipends and allowances rather than in the education of his children. The Andamanese children living around Port Blair do not know their tribal language well enough and converse among themselves generally in Hindustani. Maro said that even his eldest son cannot properly converse with elderly Andamanese coming from the 'forest'.

This young man (Maro's son) was married in 1963 to a young girl of Burman-Andamanese descent on the initiative of

senior Government officials. The Burman father received some money and help in return. The girl stayed with Maro's son for about two years and gave birth to a child. But the Burman father influenced her and took her and the child back with him. Maro reported that this is because the Burman wants to marry his daughter to another Burman and get more money out of her. He showed great indignation over the incident. The young husband was so dejected (there being few young girls available for marriage) that he absconded from his job and went all alone to Rutland Island and wandered around from one Andamanese camp to another for some time.

Whatever little social and religious life of the Andamanese exists today bears no resemblance to the traditions described in literature. The sub-tribal identities are still recognized but are not valid for any purpose. No marriage restriction except for siblings seems to hold good. They frequently use Hindustani kinship terms like *chacha*, *phupha*, *mama*, *bhai* (for both brother and sister). Marital unions are unstable. There are no ceremonial or ritual observances in marriage or divorce. The elaborate initiation rites and mortuary rites are no longer performed. My enquiries seem to indicate that they have forgotten even some of the major customs and rites. Some taboos and prohibitions, adulterated with beliefs picked up from Burmans and other local settlers, are recognized but not strictly adhered to. One informant lamented that his daughter-in-law did not obey his instructions to abstain from certain acts and food-items considered taboo for an expectant mother. There is only one communal hut in a tattered state, but this too bears little similarity to the traditional hut. The roof is like that used by forest labourers instead of the knitted type. Beds are like *charpoys*. In other places they generally live in the Burman type of high-platform huts with split-bamboo walls and floor. The wooden buckets, bow and arrow, fine mats and baskets are not made now. Improvised 'foreign' materials are used. Those still following hunting, generally use traps given by Burmans or use the Jarawa-type of bows. Few male adults are said to know how to make an S-shaped bow. This is,

however, not possessed or used by any one now. Only Loka's wife is said to know how to make fine mats and baskets. For subsistence, they depend upon rice, *atta* (wheat-flour) and *dal*, occasionally accompanied with crabs, shells, fish, meat, etc. The Andamanese living near Tirur occasionally also depend upon tubers, roots, stems, wild fruits, etc., especially when they are temporarily out in the forest on a hunting expedition. They collect some honey which they generally sell or barter away. They fish with hook and line. Only some elderly persons go for turtle hunting with spear or harpoon. Some informants said that turtle meat does not suit their stomach. They generally cook meat and fish with molten butter (*ghee*), oil, spices, chillies and salt, and prepare curry. Biye said that their children cannot digest roasted hard pork or turtle meat. The women generally do not go to forest for gathering, except when they have nothing to eat.

They do not use clay paint for decorating or protecting their bodies. They all wear clothes and footwear. In dress and decoration, the Andamanese women follow the local Burman style. There is no dancing or singing except for exhibition before V I Ps. A few songs that I heard pertain to current or modern life situations.

I was able to get information about recent important events like a birth in Maro's house, Biye's death in Rutland Island, marriage of Maro's son, attainment of puberty by Konmo's daughter, running away of Maro's son's wife. The sketchy descriptions I collected suggest that none of these events was preceded, accompanied or followed by any ritual or formal social gathering except the marriage of Maro's son. The reason for this was the interest taken by top local officials in contracting this marriage. They paid gifts and granted some money to the girl's father (Burman). The gathering was entertained by some songs and dances. Loca, Ille, Kaba, Lepai and a few other Andamanese came for the occasion and those employed by the Administration were officially brought. The Memyo-Tirur group did not come because, I was told, they did not have money to come. Some traditional

customs were imitated for the pleasure of the sophisticated gathering.

The only ritual-ceremonial occasion the Andamanese that I met have experienced in recent years is the collective observation of what they called *Baradin.* They organized such *Baradin* about 7-8 years ago with some grant-in-aid from the local administration. Most of the families migrated to Interview Island and stayed there for a few months engaging themselves in the traditional mode of life. They held some ancestor-worship rites and collective mourning for recently deceased relatives. They painted their bodies and faces, and held dancing-singing sessions occasionally. During this period small parties visited nearby islands and shores and visited some old deserted spots. The informants recalled the occasion with an air of fantasy and cherished remembrance. They lamented that necessary facilities are now not available for such *Baradin,* although they said large sums are lying in reserve for them with the Government.[1]

[1] The author is grateful to the Director, Anthropological Survey of India, for providing necessary facilities for writing this note and for permission to publish it.

REFERENCE

Kochar, V. K. 1968 : Function as social physiology or social paleontology : A review note on Radcliffe-Brown's '*Andaman Islanders,*' (*Unpublished*).

CONVERSION TO CHRISTIANITY

CH. P. K. MOHAPATRA

J. SWAIN

(Received on 12 June 1969)

Abstract : Most of us believe that conversion to Christianity brings an all-round progress to the tribals which includes, among other things, economic and educational development. With this hypothesis in view a study was undertaken in the Pottasingi area of Koraput district inhabited by the Lanjia Saora, a primitive Mundari-speaking tribe. As conversion to Christianity among the tribals of this area is not extensive, a sufficient number of converted tribals were not available for study. 40 adults from converted families were interviewed and, for control observation, 40 adults among the non-converted were also selected and interviewed. It was found after a statistical analysis that conversion to Christianity has no role in the development of the tribe except in the sphere of formal education.

History of Conversion

IN Orissa, conversion to Christianity of the tribals can be traced back to a century (1840), when the Christian mission had already set foot in the low land of Khondmal region to check the widespread practice of human sacrifice among the Khonds. Later on, efforts were gradually directed to various other tribes of Orissa. Conversion to Christianity among the Lanjia Saoras of Pottasingi area is, however, a decade old, when the misionaries of Serango Garh in Ganjam established a church in village Karanjasing. The churches in the villages of Angura, Sagada and Patil in this area have gradually developed as a result of the ceaseless efforts made by the Serango missionaries.

1. Ch. Prasanta K. Mohapatra : Research Officer.
Personal address : Tribal Research Bureau, Bhubaneswar - 6.

2. Jaladhar Swain : Junior Research Officer.
Personal address : Tribal Research Bureau, Bhubaneswar—6.

Methods Adopted for the Study

The villages around Pottasingi area are inhabited by the Lanjia Saora. Altogether nine villages were selected, and forty adult Saoras from thirty families found in Rejingtal, Alengar, Taikura, Jungjung, Basing-Garjang, Laiba and Barei (Pottasingi G. P.), Talna (Talna G. P.) and Angura (Sagura G. P.) were interviewed for the study. As non-converted tribals were numerous, the subjects were selected on the basis of sampling from all such villages.

Conversion to Christianity is believed to bring about all-round progress to the tribals. This has been taken to mean economic prosperity, educational development, wider knowledge and participation in local as well as national politics. To this has to be added a developed material culture, with possession of improved tools and implements, as well as the adoption of sanitary habits. The above criteria have been taken as the minimum to indicate all-round progress, although it may mean much more in a broader sense. These criteria have been grouped under four major indicators of progress, namely, educational, political, economic and material culture.

The four indicators of all-round progress were awarded certain marks for drawing up a statistical inference. An account may be given here of the value attached to the various indicators.

(A) **Educational achievement** : Criteria : (i) literacy capacity of signing one's name ; (ii) capability of communicating in more than one's own dialect.

(B) **Political consciousness** : Criteria : (i) knowledge about national and state-level political leaders ; (ii) participation and knowledge in local panchayat elections ; (iii) knowledge about persons bearing office, either traditional or statutory.

(C) **Economic progress** : Criteria : (i) approximate annual income from various sources ; (ii) possession of type of house (pucca, tiled or thatch) ; (iii) possession of amount of land and number of livestock.

(D) **Material culture** : Criteria : (i) ownership of agricultural implements ; (ii) dress and ornaments ; (iii) household utensils ; (iv) hygienic habits.

The individuals thus selected were interviewed and given individual scores on each major indicator, and a range was fixed so as to indicate the persons scoring below or above the standard. Those who secured marks in the standard range or above were classified as 'Developed' and the rest as 'Under-developed'. Finally, individuals were grouped according to their religion and a comparison was made according to chi-square test. Comparative picture with regard to each indicator was drawn between the individual and total of each group so as to find out the partial or total impact of Christianity on the tribals. The findings may not, however, be taken as general truth, as only forty Saoras from each religious group were interviewed. A statistical analysis of the data leads to the findings detailed below.

Findings

A. Educational achievement : Let us suppose that there is no effect of conversion to Christianity on educational achievement of the Lanjia Saoras of Pottasingi area, that is, they are independent of each other. On the basis of this supposition, we will calculate the expected frequency and compare it with the observed frequency.

Table of observed frequency

	Developed	Under-developed	Total
Non-converted	3	37	40
Converted	15	25	40
Total	18	62	80

Calculated chi-square value $= X^2 = 10{\cdot}32$

But table value of $X^2.05$ with 1 d.f. is found from the table to be 3.841 at $X^2.05$.

By comparing the two values of X^2, we found that our calculated value of X^2 is greater than $X^2.05$ with 1 d.f. that is $10.32 > 3.841$. So our assumption that conversion to

Christianity and educational achievements are independent is wrong. Hence Null-hypothesis is rejected, showing that conversion to Christianity has an effect on educational achievement.

Political consciousness : Assuming that there is no effect of Christianity on political consciousness, i.e. both are independent, we may calculate the expected frequency and compare it with the observed frequency collected.

Table of observed frequency

	Developed	Under-developed	Total
Non-converted	11	29	40
Converted	5	35	40
Total	16	64	80

Calculated chi-square $= X^2 = 2.81$.

Now the table value of $X^2.05$ with 1 d. f. is found from the table to be 3.841 at $X^2.05$ which is significant. Hence the Null-hypothesis of independence may be accepted, i.e. conversion to Christianity may not have any effect on political consciousness among them.

$$3.841 > 2.81 \ (P < .05)$$

Therefore our assumption that Christianity and political consciousness are independent may be correct and we conclude that consversion to Christianity may not have any affect on political consciousness of the Lanjia Saoras of Pottasingi area.

Economic condition : Let us suppose that there is no relation between conversion to Christianity and economic condition. On the basis of this hypothesis we will calculate the expected frequency and compare it with the observed frequency from the collected data.

Table showing observed frequency

	Developed	Under-developed	Total
Non-converted	23	17	40
Converted	15	25	40
Total	38	42	80

Now X^2 with 1 d.f. at 5% level is calculated to be 3.2. Hence 3.841 > 3.2 (P < .05)

Table value of X^2.05 with 1 d.f. is 3.841. So our calculated X^2 value is less, which means, it is insignificant ; showing that the hypothesis may be accepted, i.e. conversion to Christianity may not have any effect on economic conditions of the Lanjia Saoras.

Material culture : Suppose conversion to Christianity has no effect on material culture of the Lanjia Saoras of Pottasingi area ; that means they are independent of each other. On this hypothesis, we will calculate the expected frequency and compare it with the observed frequency collected.

Table of observed frequency

	Developed	Under-developed	Total
Non-converted	22	18	40
Converted	32	8	40
Total	54	26	80

Chi-square = X^2 = 5.68

Table value of X^2.05 with 1 d.f. = 3.841

So 5.68 > 3.84 (P < .05)

Now by comparison of the two values of X^2, we found that our calculated value of X^2 is greater than X^2.05 with 1 d.f. Hence the fact that conversion to Christianity and material culture are independent of each other is wrong and we conclude that conversion to Christianity may have some effect on material culture.

All-round progress : Let us assume that there is no relation between conversion to Christianity and all-round progress. Relying on this hypothesis, we will calculate the expected frequency and will compare it with observed frequency.

Table showing observed frequency

	Developed	Under-developed	Total
Non-converted	13	27	40
Converted	17	23	40
Total	30	50	80

Calculated chi-square value $= X^2 = 0.853$ $(P < .05)$
But table value of $X^2.05$ with 1 d.f. $= 3.841$.
Hence $3.841 > 0.853$
So the table value of $X^2.05$ with 1 d.f. is highly significant in comparison with the calculated chi-square value. Thus Null-hypethesis of independence may be accepted, showing that conversion to Christianity may not have any effect on all-round progress among the Lanjia Saoras of Pottasingi area.

General conclusion

From the above results we see that conversion to Christianity may have effect on educational achievement and material culture individually, but, on the other hand, it may not have any effect on political consciousness and economic condition. In general, also, we may conclude on the basis of the last table that conversion to Christianity may not have any effect on all-round progress or development although it appears to do so.

REFERENCES

M. Ember 1964 : 'Commercialization and political change in Americian Samoa', *Exploration in Cultural Anthropology p. 95.*

A. Das 1968 : 'Impact of Christianity on the tribals', *Adibasi* Vol. X, No. 1, April 1968.

SOCIO-CULTURAL CORRELATES OF COMMUNITY PARTICIPATION

P. C. DEB

(*Received on 1 December 1968*)

Abstract : The present paper, which is based on the study of a village near Ludhiana (Punjab), describes the participation pattern of rural people in community affairs. The main objectives of the study were to prepare a community participation scale and to bring out the socio-cultural factors associated with community participation. The findings of the study indicate that only a small proportion of the village people take active interest in the affairs of the community. Some of the socio-cultural factors which are highly associated with participation are caste, value orientation, income and occupational role.

Introduction

THE concept of social or community participation seems to have come into use in response to a desire to measure the volume of the individual's social interaction. A practical interest in determining the characteristics of people who participate extensively in community affairs has been the motivating force for most of the studies of social participation. Some of the past studies indicate that the extent of participation is closely associated with certain personal and socio-psychological factors, like age, status, occupation, education, social values, etc. (Hay 1948; Kaufman 1949; Mayo 1950, and Anderson 1946 & 1954). The area, howerer, has remained practically unexplored in India. The present study, therefore, is an attempt to portray the background of the people with different levels of participation in community life. It will add to our knowledge of village interaction pattern and will also

*Dr. P. C. Deb is Assistant Professor of Rural Socioiogy, Punjab Agricultural University, Ludhiana.

have practical utility for change agents, because the programmes of socio-economic development in the country presupposes the largest measure of co-operation from the people.

The broad objectives of the present study were : (1) to prepare an appropriate community participation scale, and (2) to highlight the factors associated with participation.

Methodology

Field-work for the study was carried on during March-June, 1968, in a village about five kilometers from Ludhiana, connected by a pucca road. The village was purposively selected, keeping in view the following factors : (1) it was a medium-sized and multi-caste village, and (2) it had people with diversified occupations.

All the heads of families in the village, numbering 114, constituted the respondents of the study. They were personally interviewed on a pre-tested schedule to collect the relevant data.

On the basis of a set of questions, the extent of community participation of each respondent was measured and then their socio-cultural characteristics were compared. These characteristics included : (a) age, (b) education, (c) value orientation, (d) income, (e) caste, and (f) occupational role.

Findings and Discussion

A. The community participation scale and participation categories : For the purpose of this study, it was considered necessary to develop an appropriate measure of social participation. Previous attempts to measure participation have mostly been in terms of membership in association or single-channel participation, like voting. Since in the Indian countryside the membership of formal organizations is limited to village panchayat and co-operative societies, the latter again being restricted to agriculturists, this study found it necessary to prepare an index of participation that would reflect informal involvement of the people in community affairs. The scale used in the study, therefore, was based upon six questions that were regarded as constituting informal community participation.

These questions pertained to such behaviour as : (1) consulting and discussing with or taking advice from others in (a) intra-family, (b) inter-family, and (c) inter-caste problems ; and (2) visiting, friendship, and exchange of work.

The method of scoring was to give each individual one point for each citation received by him from others in the community. The resulting individual score ranged from zero to 22. On the basis of frequency of scores, the respondents were classified into three social participation categories : high (score 14 and above), medium (score 7-13), and low (score 0-6) (Table 1).

TABLE 1

Distribution of respondents on the basis of community participation index

Index	Number	Per cent
High (14 and above)	19	16.6
Medium (7-13)	33	28.8
Low (0–6)	62	54.6
Total	114	100.00

As is apparent from the above table, the majority of respondents were those who took little part in community affairs, followed by the medium and high participation groups. It thus indicated that high community participation in the village was limited to a small proportion of the people.

B. Relationship of socio-cultural characteristics with community participation categories : To test the validity of the relationship of each of the six variables, namely, age, education, value orientation, income, occupational role, and caste, with the community participation index, the coefficients of correlation were worked out in the first four cases and chi-square in the fifth and sixth cases. The data are summarized in Table 2.

Age : As is apparent from Table 2, the majority of the respondents in the high participation category were old, while

only a small percentage of the persons in the medium and low participation categories were above 50 years (18.2 and 24.2 respectively). Again, about two-thirds of the people in the medium and low participation categories and one-third in the high category were of middle age (31-50). It is thus obvious that the extent of social participation increases with advance in age.

The coefficient of correlation between age and community participation, however, was found positive but not statistically significant.

Education: The majority of respondents in the high participation category were literate, while literacy percentages amongst the other two categories were 39.4 (medium) and 37 (low). Again, as compared to about two-thirds of the respondents in the low category who were illiterate, only 47 per cent of the high participation respondents were without any education. Although, the coefficient of correlation between education and participation was not found significant, still a tendency towards association between education and community participation can be noticed from the above analysis.

TABLE 2

Distribution of respondents according to socio-cultural characteristics and participation index

	Community participation index							
Socio-cultural characteristics	14 and above (High)		7–13 (Medium)		0–6 (Low)		Total	
	No.	%	No.	%	No.	%		
1. Age :								r
Young (up to 30 yrs.)	3	15.7	5	15.2	7	11.3	15	+0.042 N.S.
Middle (31–50 yrs.)	6	31.6	22	66.6	40	64.5	68	
Old (51 yrs. & above)	10	52.6	6	18.2	15	24.2	31	
	19		33		62		114	

Socio-cultral characteristics	14 and above (High) No.	%	7–13 (Medium) No.	%	0–6 (Low) No.	%	Total	
2. Education :								
Illiterate	9	47.4	20	60.6	39	62.9	68	+0.063 N.S.*
Literate	10	52.6	13	39.4	23	37.1	46	
	19		33		62		114	
3. Value orientation score :								r
Traditional (up to 35)	3	15.7	12	36.4	27	43.5	42	+0.369**
Transitional (36–45)	5	26.3	10	30.3	22	35.5	37	
Modern (46 & above)	11	58.0	11	33.3	13	21.0	35	
	19		33		62		114	
4. Income : (thousand rupees)								r
Low (up to 5)	4	21.0	21	63.6	49	79.0	74	+0.414**
Medium (6–10)	5	26.3	8	24.2	7	11.3	20	
High (11 & above)	10	52.6	4	12.1	6	9.7	20	
	19		33		62		114	
5. Occupational role :								x^2
Farm	13	68.4	11	33.3	18	29.0	42	10.00**
Profession and Semi-skilled	2	10.5	13	39.4	28	45.2	43	
Unskilled	4	21.0	9	27.3	16	25.8	29	
	19		33		62		114	
6. Caste :								x^2
Jat	13	68.4	11	33.3	18	29.0	42	10.00**
Non-Jat	1	5.2	6	18.2	13	21.0	20	
Harijan	5	26.3	16	48.5	31	50.0	52	
	19		33		62		114	

* Significant at 5 per cent level.

** Significant at 1 per cent level.

Value orientation : Each individual was administered twenty statements on traditional-modern way of life, with set-answers on a three-point scale. The total points an individual received became his value orientation score. The actual individual scores varied from 28 to 55. On the basis of individual scores, the respondents were categorized into three groups : traditional, transitional and modern.

Modern outlook was the dominant feature of the high participant group, while the highest percentage (43.5) of the low participation respondents held the traditional value of life.

The coefficient of correlation between value orientation and participation categories was found positive and significant at 1 per cent level, indicating that community participation has positive relationship with value orientation of the people.

Income : The majority of the high participation group had the highest income in the community. As against about two-thirds of the respondents in the low participation category, with lowest income, only 21 per cent in the high category had such income.

The coefficient of correlation between income and community participation, which was found positive and significant at 1 per cent level, indicates that income is highly associated with community participation. Persons with higher income, therefore, would have a better chance of taking active part in community affairs than those with lower income.

Occupational role : It is obvious from the table that farming is the dominant occupation of the respondents in the participation category. Only a small percentage of the people in the three participation categories were engaged in unskilled work.

The chi-square value between occupation and participation categories, which was found significant at 1 per cent level, indicates that occupational role is highly associated with participation in social groups. In an agriculture-based society, farmers, who are generally the dominant group in the village, take active interest in community affairs.

Caste : Respondents were divided into three caste

categories : (1) Jat, (2) Non-Jat (other castes excluding Jat and Harijans), and (3) Harijan.

The largest proportion (over two-thirds) of the respondents in the high participation group belonged to the Jat (cultivator) caste. However, Harijan (scheduled castes) respondent were found largest in both the medium and low participation categories. The chi-square value between caste and participation categories was found highly significant. It is thus indicative of the fact that cultivating caste (Jat) and numerically superior castes (Harijan) take more interest in group activities in the village as compared to other caste groups.

Summary and Conclusion

The present study of social participation was undertaken in a village in the Punjab with a view to developing an appropriate measure of community participation, to classify the villagers into participation categories, and to highlight the socio-cultural factors associated with the extent of participation.

On the basis of six questions pertaining to interaction in the community, a scale of community participation was constructed and the respondents (all heads of households) were grouped into three participation categories : high, medium and low. The findings indicate that active participation in group life is limited to a small proportion of the population.

To find out the relationship of socio-cultural characteristics with community participation index, the statistical measures used were co-efficient of correlation and chi-square test. The findings indicate that there is a significant relationship between participation index and four variables, namely, income, occupational role, value orientation, and caste group. In case of age and education, although the coefficients of correlation were not found significant, yet the analysis indicates that these two factors have some association with the extent of community participation.

At the moment, when great strides are being made to bring about socio-economic change in the country, with the willing

participation of the people in the various development programmes, the findings of the study would be useful to those who are engaged in this gigantic task.

The study has explored a new area of sociological research. Further studies are needed to draw useful generalizations.

REFERENCES

Anderson, W. A. 1946 : 'Family social participation and social status self-rating', *Amer. Soc. Rev.* Vol. 11 : 253 – 258.

Anderson, W. A. 1954 : 'A summary of urban fringe families and their social participation in Ithaca, New York', *Cornell Rur. Soc.* Mim. Bull. 43.

Foskett, J. M. 1955 : 'Social structure and social participation', *Amer. Soc. Rev.* Vol. 20 : 431 – 438.

Hay, Donald G. 1948 : 'A scale for the measurement of social participation of rural household', *Rur. Soc. Rev.* Vol. 20 : 431 – 438.

Kaufman, H. F. 1949 : 'Participation in organized activites in selected Kentucky localities' ; *Kentucky AES Bull.* 528.

Mayo, Selz C. 1950 : 'Age profiles of social participation in rural areas of Wake County, North Carolina', *Rur. Soc.* Vol. 15 : 242 – 151.

ATTITUDE TOWARDS AGRICULTURAL DEVELOPMENT AMONG TRIBAL AND NON-TRIBAL PEOPLE

N. K. JAISWAL, A. S. KHAN & JAI SHANKER

(Received on 1 June 1969)

Abstract : A study was made in Bihar to analyse the attitude of tribal and non-tribal leaders and followers towards agricultural development. It was generally found that the leaders as well as followers in both the communities did not possess any positive attitude towards official programmes and personnel. The attitude of followers however was found to be more negative than that of the leaders.

Introduction

IN many areas of Bihar, tribal and non-tribal villages are located side by side, both being served by the same extension agency. But as the socio-cultural conditions of tribal and non-tribal villages differ greatly, it is presumed that the responses of tribals and non-tribal leaders and their followers towards extension programmes will also vary considerably. The analysis of the reactions of leaders towards agricultural programmes in comparison with their followers would be of great help in predicting how far these leaders will be helpful in motivating their followers in accepting the recommendations of agricultural agencies. A comparison of the responses of tribal and non-tribal leaders will help extension workers to plan specific approaches for effective utilization of the leaders of these two communities.

Selection of area : The present research was carried out in Community Development Block, Raneshwar, in the district of Santal Parganas, Bihar, for the following reasons :

Dr. N. K. Jaiswal is Asst. Professor, Social Science, Bihar Agricultural College, Sabour. A. K. Khan is the Block Agricultural Officer of Jamua & Jai Shanker is a post-graduate scholar.

1. Both tribal and non-tribal villages are situated in the same locality and this was likely to facilitate comparative analysis of tribal and non-tribal leaders.
3. The researchers were well acquainted with the socio-economic condition of the tribal and non-tribal villages.
3. As one of the researchers belonged to that locality, he could speak the local dialect, which facilitated rapport-building with the respondents.

Selection of villages : Separate lists of tribal and non-tribal villages were prepared and, in consultation with the Block staff, two from each having similar agro-physical conditions and cropping pattern were selected. These four selected villages were :

(a) Tribal : Jaherpara and Pathorahal

(b) Non-tribal : Hakikatpur and Rangametia

Identification of leadership situation : In a pilot study in the area of investigation mainly four types of leaders, namely, Traditional, Political, Agricultural and Leaders in Social Affairs were observed ; and it was decided to carry out this investigation with respect to all these four types of leaders. For the present investigation, it was decided to use the sociometric technique which is most widely used for identification of leaders. For developing the sociometric test, all the four types of leadership situations were explained to the respondents and they were asked to indicate their first three choices for each leadership situation.

Interviewing : In order to secure sincere and honest views of the respondents, the following precautions were taken during interviews : (1) a good rapport was built up with the villagers and the influentials ; (2) care was taken to interview the respondents when they were alone ; (3) questions regarding preferences were asked gradually. After finding out the first choice of the respondent, he was asked to mention his second choice, supposing that the leader of his first choice was absent. The third choice of a respondent for a leader was similarly found out. (4) Every precaution was taken to keep the responses as confidential as possible.

Selection of leaders : After the completion of field-work, identification marks were given to all the respondents as they came in sequence for interviewing. The next step was to prepare a N x N matrix with chooser along the matrix and chosen across the matrix. In the N x N matrix, the preference (1st, 2nd and 3rd) which an individual received were counted separately for each situation. The scores assigned to three preferences of the respondents are indicated in the parentheses. First preference (3), Second preference (2) and Third preference (1). Sociometric scores were calculated by adding the scores obtained by the individual for each leadership situation separately.

The situation-wise sociometric scores of the respondents of each village were arranged in descending order, and the first three individuals were taken as leaders. It was found that leadership was overlapping in most of the situations, i.e. a person who was leader in one situation was also a leader in other situations. The following table gives the details of leaders selected from each village for the four situations.

TABLE 1

Village-wise distribution of leaders

Number and situation	Tribal village		Non-tribal village	
	Jaherpara N=3	Pathorahal N=5	Hakikatpur N=5	Rangamatia N=6
1	–	2	2	3
2	–	1	1	1
3	–	–	–	1
4	3	2	2	1

Selection of followers : After identification of the leaders, the remaining heads of households were grouped as followers

and fifty per cent of them were selected by stratified random sampling. The followers were first stratified into the following six classes based on the size of holding: (1) no land, (2) up to 1 acre, (3) 1 to 5 acres, (4) 5 to 10 acres, (5) 10 to 15 acres and (6) 15 to 20 acres. From each stratum, 50 per cent of the followers were selected by random sampling. In total there were 29 followers from tribal villages and 33 followers from non-tribal villages.

Construction of attitude scales: For measuring the attitudes of the respondents towards agricultural development programmes and agricultural extension personnel of the Block under study, two attitude scales were developed by the method suggested by Likert (1932). The following procedure was adopted for construction of the attitude scale.

Collection of Attitude Statements

A pilot study was conducted in Raneshwar Block to collect such statements as would reflect the attitude of the tribal and non-tribal people towards agricultural development programmes and the extension personnel of the Block.

Scrutiny of the items: The items which were collected in the pilot study were given to 30 postgraduate students and teachers of the Bihar Agricultural College, Sabour, for scrutiny by checking those which were:

(i) vague and ambiguous,
(ii) duplicate statements,
(iii) containing more than one idea.

The judges were also asked to classify the statements into three categories:

(i) statements which clearly reflected positive attitude towards Block or Block personnel,
(ii) statements which clearly reflected negative attitude,
(iii) statements which were neutral, i.e. neither positive nor negative.

The responses obtained from the judges were analysed and the items which were marked as clearly positive or clearly negative by more than 80 per cent of the judges were selected.

The total number of statements was eighteen for agricultural development programmes and twenty for Block personnel.

Validity of the Statements

To test the validity of each statement, pre-testing was done among sixty tribal and non-tribal farmers of Raneshwar Block. The respondents were asked to indicate the degree of agreement with each statement. For this, they were asked to rate the statements on five points, namely, strongly agree, agree, indifferent, disagree and strongly disagree. It was found that the common way of expression of both tribal and non-tribal people regarding their degree of agreement with each issue was in terms of anna in a rupee. For example, the respondent who strongly agreed with the statement used to say that they agreed up to 16 annas with the issue. When this expression was taken into account, it was found that it was not difficult to get the rating of the respondents on five points. The five points of the rating scale were given scores as indicated in the parentheses : strongly agree (5), agree (4), undecided or neutral (3), disagree (2), strongly disagree (1), for the positive item. For negative statements, the scores were reversed : strongly agree (1), agree (2), undecided or neutral (3), disagree (4), strongly disagree (5).

Thus the scores on each statement ranged from 1 to 5, and the total scores for 18 attitude items each for Block personnel and working of Community Development Block ranged from 18 to 90.

To test the validity of each item the coefficient of correlation between the scores of individual items and total score was worked out for the data obtained from the sixty respondents. The coefficients of correlation were tested against 58 degree of freedom. The statements which had significant and positive correlation with the total scores were taken as valid statements. Ten such statements each for working of Community Development Block and Block personnel were selected for the final form of attitude scale.

Findings

Attitude towards agricultural extension programme : The basic requirement for favourable attitude of a rural community towards the agricultural development programme is that they must have faith in the programme and must possess a favourable attitude towards it. The data regarding frequency distribution of respondents and mean attitude score of respondents are presented in Tables 2 and 3.

TABLE 2

Distribution of respondents by scores on attitude towards agricultural extension programme

Attitude score	Non-tribal leader (NL)	Tribal leader (TL)	Non-tribal follower (NF)	Tribal follower (TF)
	N=11	N=8	N=33	N=29
Below 1.5	–	–	1 (3.03)	–
1.6 – 2.5	1(9.09)	5(62. 5)	14(42.42)	17(58.62)
2.6 – 3.5	7(63.36)	3(37.50)	18(54.54)	12(41.38)
3.6 – 4.5	3(27.27)	–	–	–
Above 4.5	–	–	–	–

TABLE 3

Mean attitude of different groups of respondents towards agricultural extension programme and calculated value of C.D.

Respondent-categories	Non-tribal leader (NL)	Tribal leader (TL)	Non-tribal follower (NF)	Tribal follower (TF)
Mean score	3.20	2.59	2.65	2.38

F ratio 7.95 ** (Significant at 1% level)

Value of C.D. at 5% level for

NL vs. TL = 0.44	NF vs. TF = 9.24
NL vs. NF = 0.34	NL vs. TF = 0.34
TL vs. TF = 0.38	TL vs. NF = 0.38

Results NL NF TL TF

It appears from Table 2, that none of the respondents had attitude scores above 4.5. This indicated that none of the tribal or non-tribal leaders and their followers had strongly favourable attitude towards the agricultural extension programme. However, considerable variation was observed in the frequency distribution and mean score on attitude of four groups of respondents.

Tribal versus non-tribal leaders : It will be noticed from Table 2 that only one (9%) non-tribal leader had a negative attitude towards the agricultural extension programme. The majority (63%) of them held neutral attitude and 27 per cent held a slightly positive attitude. As against this, none of the tribal leaders held a positive attitude towards the agricultural extension programme. The majority of tribal leaders (62.5%) held negative attitude and only 37 per cent of them possessed neutral attitude. It is clear from Table 3 that the mean attitude score of non-tribal leaders (3.2) was significantly higher than that of tribal leaders (2.59). This indicates that non-tribal leaders in general had less negative attitude towards agricultural extension programme than the tribal leaders.

The less negative attitude of non-tribal leaders might have been due to the fact that in comparison with tribal leaders they had more contacts with the extension personnel. The informal interview in the area also revealed that the tribal leaders received relatively much less help from the extension agency than non-tribal leaders. It was natural therefore that the tribal leaders held a more negative attitude than non-tribal leaders.

Leaders versus their followers : The comparison of attitude score of leaders and followers in the case of non-tribal community revealed that a greater percentage of followers held negative attitude towards agricultural extension programme than their leaders. Though, three non-tribal leaders had a positive attitude, none of their followers held a favourable opinion towards agricultural extension programme. It will be noticed from Table 3 that the mean attitude score of non-tribal

followers (2.65) was significantly lower than that of their leaders (3. 20). Thus it can be concluded that the attitude of non-tribal followers was more negative towards agricultural extension programme in comparison with their leaders. It was quite a common observation in the area of investigation that whatever little efforts were made by the extension workers under the agricultural extension programme, these were mostly confined to the local leaders. It was natural, therefore, that the followers who received less help from the extension agency held more negative attitude towards the agricultural extension programme.

The frequency distribution of tribal leaders and their followers revealed that the majority of both tribal leaders and their followers had a negative attitude towards agricultural extension programme. It was also found that the mean attitude score of tribal leaders (2.59) and their followers (2.38) did not differ significantly. This indicated that both tribal leaders and their followers held an equally negative attitude towards agricultural extension programme. This might have been mainly due to the fact that practically no significant and tangible work was done for the development of agriculture in tribal villages. Therefore, both tribal leaders and their followers were found to be equally dissatisfied with the agricultural extension programme.

Attitude towards agricultural extension personnel : It is well known that for implementing the extension programme, the extension personnel must win the confidence of people. Before they can make the people accept and act upon their recommendation, they themselves have to be accepted by the people. Thus the attitude of people towards agricultural extension personnel is of significant importance for their favourable response towards the agricultural extension programme itself. The frequency distribution and mean scores on attitude of respondents towards agricultural extension personnel are presented in Tables 4 and 5.

TABLE 4

Distribution of respondents by scores on attitude towards agricultural extension personnel

Scores	Non-tribal leader (NL)	Tribal leader (TL)	Non-tribal follower (NF)	Tribal follower (TF)
	N=11	N=8	N=33	N=29
0.6 – 1.5	–	–	1(3.03)	–
1.6 – 2.5	5(45.45)	6(75.00)	19(57.57)	23(79.31)
2.6 – 3.5	6(54.54)	2(25.00)	12(36.36)	6(20.69)
3.6 – 4.5	–	–	–	–
Above 4.5	–	–	–	–

TABLE 5

Mean scores on attitude of different groups of respondents towards Block personnel and calculated value of C.D.

Respondent-categories	Non-tribal leader (NL)	Tribal leader (TL)	Non-tribal follower (NF)	Tribal follower (TF)
Mean attitude scores	2.71	2.12	2.37	2.06

F ratio 2.82* (Significant at 5% level)

Value of C.D. at 5% for :

NL vs. TL	= 0.38	NF vs. TF	= 0.21
NL vs. NF	= 0.29	NL vs. TF	= 0.29
TL vs. TF	= 0.32	TL vs. NF	= 0.22

Results	NL	NF	TL	TF

(TL and TF underlined together)

It will be noticed from the table that none of the tribal leaders or their followers had an attitude score above 3.5. This indicated that none of the tribals or non-tribals possessed even

slightly favourable attitude towards agricultural extension personnel. However, Tables 4 and 5 indicated that considerable variation existed in the attitude of a few groups of respondents with respect to agricultural extension personnel. This can be discussed as under.

Tribal versus non-tribal leaders : It appears from Table 5 that a relatively larger percentage of tribal leaders (75 per cent) held a negative attitude towards Block personnel as compared to non-tribal leaders. Table 5 also discloses that the mean score of non-tribal leaders was 2.7. This clearly indicates that their attitude towards Block personnel was less unfavourable than that of tribal leaders. But as the mean scores in both the groups were below 3.0, it can be said that both tribal and non-tribal leaders did not possess favourable attitude towards Block personnel. This clearly indicated that the Block extension personnel had not been able to gain the confidence of the local leaders.

Leaders versus followers : The study of attitude score of leaders and followers in the non-tribal community reveals that in comparison with the leaders a larger percentage of their followers (60%) held negative attitude towards Block personnel. The mean attitude score of non-tribal followers (2.37) was significantly less than that of their leaders (2.71). This also indicates that the attitude of the general mass of non-tribal was more negative towards Block personnel as compared to their leaders. This might have been due to the fact that the non-tribal leaders received relatively greater help from extension personnel than their followers.

The frequency distribution of tribals by attitude scores presented in Table 4 reveals that the majority of both tribal leaders (75%) and their followers (79%) held a negative attitude towards Block personnel. It is noticed in Table 5 that there was no significant difference between the mean scores of these two groups of tribal respondents. This clearly indicated that both tribal leaders and followers held an equally negative attitude towards Block personnel.

It is interesting that the non-tribal followers had significantly higher mean scores than tribal followers as well as tribal leaders. Thus one can say that the tribals had more negative attitude towards Block personnel than the non-tribals.

The reasons for significant variation in the attitude of tribals and non-tribals was quite apparent. The informal observation in the area revealed that extension personnel who were themselves non-tribals did not have much contact with tribal people. It was also found that they paid comparatively less attention to the agricultural extension programme of the tribal villages. It was the main reason for the common saying in the tribal villages that extension personnel were meant for the benefit of the *dikus* (non-tribals) only.

Conclusion

The preceding discussion points out that though there was significant variation between the mean scores of tribal and non-tribal leaders and their followers, all the four groups of respondents in general did not possess favourable attitude towards the agricultural extension programme and agricultural extension personnel, and the difference between them was a matter of degree and not of kind.

The detailed analysis of the response of respondents on specific items of the attitude scale related to the agricultural extension programme revealed that all tribal and non-tribal respondents strongly felt that most of the agricultural extension programme in the Block was confined to paper and very little work was done in the field. The majority of the respondents also felt that their primary need was to secure adequate irrigation for increasing agricultural production. But according to them, no significant work was done by the Block in the field of irrigation. Thus the majority of tribal and non-tribal farmers were dissatisfied with the agricultural extension programme of the Block. The informal interviews in the area also revealed that the Block under investigation was started in 1952, and during the first few years quite

impressive work was done; but now after sixteen years of existence, the Block was carrying on merely a routine type of work.

As discussed in the preceding section, the majority of both tribal and non-tribal respondents also held a negative attitude towards Block personnel and the analysis of the response on specific items of attitude scale related to Block personnel revealed that both the tribal and non-tribal felt that the agricultural extension worker did not make a sincere effort to help the farmers, and their approach was confined to a few influential persons in the village. They also said that the agricultural extension worker made false promises and were more concerned about obeying the orders of their officials than in looking after the problems and needs of farmers. A considerable percentage of respondents believe that agricultural personnel possess bookish knowledge of agriculture, which has no practical utility for them.

Thus it can be concluded that agricultural extension personnel have failed to gain the confidence of both tribal and non-tribal leaders and their followers in the area under investigation.

The Implication

The present investigation brings to light that the Community Development Programme, even after sixteen years of operation has not been able to create a favourable response among both tribal and non-tribal communities with respect to the agricultural development programme and its personnel.

In such a situation the help of local leaders could have been of some value. As both the tribal and non-tribal leaders did not hold positive attitudes towards either agricultural development programme or personnel, it can be concluded that in the existing state of affairs the leaders of both communities will not to be of much help in motivating their followers to co-operate in the agricultural development

programme. It may be pointed out here that in the non-tribal community, the leaders had significantly less negative attitude than followers. But in the tribal community the difference between the attitude of leaders and of followers was found to be non-significant, and the tribals in general possess more negative attitude than non-tribals. Therefore, the extension worker may find it more difficult to get favourable responses among the tribal as compared to non-tribal communities.

The pre-requisite for future planning therefore should be, firstly, to identify the local leaders and, secondly, to impart them with necessary training with respect to leadership qualities and subject matter in agriculture.

One thing must be kept in mind while selecting the leaders that farming is a way of life for our rural communities. Therefore, the response of our farmers towards any agricultural development programme is greatly influenced by the response of their local leaders. It is a common observation in rural areas that if a local leader in the field of social or religious affairs rejects an innovation in farming, their followers may not look for the advice of their agricultural leaders, rather they will immediately give an unfavourable response to the farming innovation.

Thus, the above discussion leads us to the conclusion that while selecting leaders for training, care must be taken to include local leaders of all kinds. Persons who are leaders in situations other than agriculture may not be of much help as the advocate of change in farming, but they can play a destructive and negative role as rejectors of innovation. Therefore, the analysis of response of such leaders, like traditional, political and social towards agricultural extension programme and their training in the field of improved methods of farming should form an important aspect of the development of leadership in any rural community.

While developing leadership in rural areas like Santal Parganas where both tribal and non-tribal villages are

situated side by side, another point which needs consideration is that the leadership pattern and response of local leaders towards an extension programme varies considerably in tribal and non-tribal communities. Therefore, the primary requirement of developing leadership in such areas should be to have a separate analysis for the identification of local leaders and their response towards agricultural extension programme. This may be of significance for planning specific approaches for the training and development of tribal and non-tribal leaders.

BITLAHA : ANALYSIS OF A SANTAL INSTITUTION

SACHCHIDANANDA

(*Received on 31 October 1968*)

Abstract : The author describes the Bitlaha institution of the Santals. This is a form of extreme punishment meted out to such offenders as have transgressed the communal code in respect of the taboo against sexual relations inside the clan or outside the tribe.

I

BITLAHA is a most impressive and unique institution in tribal India. It occurs among the Santal, a large tribe concentrated in northern Orissa, eastern and south-eastern Bihar and the western parts of Bengal. In one district alone in eastern Bihar, which is also known after them as Santal Parganas, they number about eight lakhs. In the entire State, their population exceeds 1.5 millions. They are settled agriculturists occupying plateaux and river valleys. They are skilled earth-workers also. They speak Santali, a language belonging to the Mundari group. In Orissa and Bengal they also speak the regional language. They are a patrilineal and patrilocal community with an elaborate social organization. They are divided into a number of clans (Paris) and sub-clans (Khut). They are a colourful people and are widely known for their wealth of traditions, folk-lore and their ability to bring culturable waste under the plough. They enjoyed a large measure of internal autonomy in which the authority of traditional headmen was strengthened by governmental recognition. Until recently they were largely governed by their own laws and had their own methods of punishment of different kinds of crimes. The kind of punishment differed according to the

Dr. Sachchidananda is Professor of Sociology in the A. N. Sinha Institute of Social Studies, Patna. His personal address is 147, Kadamkuan, New Area, Patna—3.

enormity of the crime. The tribe has long attracted the attention of diligent missionaries, administrator-scholars, anthropologists etc. The number of published books and papers on this tribe will probably outnumber those on any other tribe in India.[1] In none of these studies do we find an analysis of Santal culture with modern conceptual tools. In this paper an attempt has been made to examine one of the institutions of the Santal in the strictly functional framework.

II

In all societies there are certain social values. Belief in these common values keeps the members of the society together. Any breach of these values invites negative reaction on the part of the society. This reaction may be either diffused or organized. In Santal society any sexual relation between two members of the same clan amounts to incest. The punishment for the breach of the social code is the same as that of kin incest. The structural distance between the parties to the incest is not taken into consideration in awarding the punishment and in expiation for the sin committed. The position is different from that obtaining among the Nuer (Evans-Pritchard 1940) in this regard. The punishment is excommunication, temporary or permanent, for which the village and the Pargana Panchayat is the competent authority. Bitlaha dramatizes the punishment in such a way as to enhance the severity of the sentence hundredfold. It is in the nature of subjection to open expression of reprobation, or derision or ridicule through forcible exposure and by exclusion from full participation in social life and its privileges, including permanent or temporary loss of civic rights. In certain cases of permanent Bitlaha, the offenders suffer social death. They cease to exist for the community as such.

Bitlaha is also resorted to in cases of sexual relation between a Santal and non-Santal. This is an ex-parte affair as the Santals take the decision themselves, the participation of the other party not being essential. The Santals take such an offence as a threat to their tribal integrity and purity. Strictly

speaking, tribal custom should be confined to the tribesmen alone, but there is a tendency to apply the punishment to the offenders of other communities also. The administration takes the view that such a Bitlaha is illegal. Such a Bitlaha at times takes the character of a vendetta against the non-tribal, not only for the most recent offence, but also for feeding fat the all-time grudge against the community as a whole. In the Bitlaha held at Maheshpur in June 1956 firing had to be resorted to. Ten Santals died on the spot. The offender was a Bengali. Twenty thousand Santals had gathered there with deadly weapons. Archer (1946) has reported eighteen cases of Bitlaha between 1920 and 1945 in which one of the parties was a Hindu or a Muslim. There were some more in which one of the parties was a non-Santal tribal.

The incidence of Bitlaha is declining. Archer reports that in each year during his time (1942-46) the number of Bitlaha in which both the parties were Santals ranged between five and fifteen. In the decade 1953-63 only eight Bitlaha (Rai Chowdhry 1965 : 881) were performed and those only in Dumka and Pakur Subdivisions.

III

Bitlaha is a form of extreme punishment meted out to such offenders as have transgressed the tribal code in respect of the taboo against sexual relations inside the clan or outside the tribe. It is performed by an enormous crowd to the accompaniment and thunder of drums. The crowd advances on the house of the offender in long surging lines. Symbolic defilement of the courtyard is performed. 'It is a disciplined expression of revolted disgust' (Archer 1946). Its savage dignity is a manifestation of the will of the community to assert tribal values. This assertion of tribal values is the character of the institution of Bitlaha.

A large number of people from different villages in the neighbourhood participate in it. They come in response to the *dharwak* signal which is passed from village to village as a call to Bitlaha. *Dharwak* is a twig or branch of *sal* tree with its

leaves stripped to indicate the number of days after which the Bitlaha will be held. One of the leaves is folded into a cone to symbolize the penis and another is pinned into a grove to symbolize the vagina. Men and boys from all over the villages join the crowd with their Manjhi[2] or their assistants. Their number runs into several hundreds. It is the hugeness of the crowd that dwarfs the village and infuses it with awe and terror. As the effect of sculpture cannot be separated from its size, so also the effectiveness of Bitlaha depends very much on the strength of the crowd. The whole area is mobilized into action. The entire resentment of the neighbourhood is focussed on the culprit in his own village. This reinforces forcefully the tribal code. The huge concourse of people constitute the personnel of the institution.

The performance of the Bitlaha is regulated by a set of rules which are meticulously observed. The first move is to secure tribal approval for it. The village headman informs the Pargana[3] on the recommendation of the village and requests him to call a meeting of five Manjhi. This is the reviewing authority and until the village decision is confirmed Bitlaha cannot take place. In case a Manjhi or a village ignores this procedure and announces the Bitlaha, the five Manjhi ask for its justification. If they are unconvinced they fine the erring Manjhi. This fine is known as *Ojok jalat* and is of the same value as the outcaste himself would have to pay in order to be readmitted to the tribe. After the Bitlaha is duly sanctioned, the date for it is fixed by the Manjhi and the Pargana in consulation with the Dihri.[4] The Manjhi then sends a message to the various villages through the *dharwak* signal. In Dumka, Pakur and Rajmahal subdivisions, where the land is covered by hills and forest, it is not possible to recall the *dharwak* once it is issued. In other areas which are more level and open it can be recalled if there is at least one market day before the scheduled date of performance of the Bitlaha.

The crowd assembled for the Bitlaha is met at the entrance of the village by the person at whose instance it is being performed. This is generally the village headman or the Jog

Manjhi.[8] In case there is no one to receive the crowd, it would amount to an insult to the whole area and the Bitlaha may lose its original purpose and the convener of the assembly or even the whole village may be subjected to Bitlaha.

After the assembly settles down, it breaks up into small groups for discussion or entertainment. At night the Dihri arrives and the gathering takes the character of an ad-hoc Hunt council in which matters not connected with the Bitlaha but concerning the general well-being of the entire neighbourhood are discussed. The Dihri sacrifices fowl to appease the deities of the hills and forests. The next morning the Godet[9] is sent to summon the offenders. The facts are laid before the assembly. The tribal law on incest is recounted and its horror impressed upon the people. The assembly is then asked to ratify the decision of Bitlaha. Since the offenders generally stay away, the ratification is a formal affair. If they attend and offer to pay a fine, the Bitlaha may be called off, in case the assembly so decides, in some parts of Santal Parganas. In most parts however this is not possible.

The Dihri then leads the huge concourse with a branch of the *sal* tree in which the leaves are sewn to represent the male and female organs with a soiled leaf-plate attached to the top. Dancers move up and down the village. The drums are beaten and people sing obscene songs. A large number of people enter the house of the offender and urinate on the walls. The cooking pots are broken and people defecate in the courtyard.

All these rules represent the norm of Bitlaha.

The Bitlaha involves the use of artefacts. It has a set of material apparatus without which no activity can take place. The first one is the *dharwak* signal which is circulated from village to village to announce the Bitlaha. This is a branch of *sal* tree in which only such number of leaves are left on the stem as there are days before the performance of the ceremony. Secondly, people who gather for the Bitlaha carry sticks, flutes, buffalo horns, and bows and arrows. The Dihri carries aloft a *sal* branch in which the same sexual motif is prominent

as in the *dharwak* signal. At the top of the branch is fixed a soiled leaf-plate, a worn-out broom or a burnt piece of wood.

The Bitlaha involves a great deal of activity which may be described from the time the assembly gathers on the outskirts of the village. Some of them light the fire, some doze and others entertain themselves with dances. Two or more naked dancers move about. Folk tales with a strong sexual bias are recited and lewd songs are sung. Thus the crowd regales itself for the night. Next day, under the leadership of the Dihri, rows of men dancers advance to the accompaniment of drums. About a dozen drummers and a number of boys with flutes and horns make the scene extremely noisy. After some time they all settle down to hear the case in detail from a visiting Manjhi. Ancient custom is recounted. The offenders are not there. Their excommunication is proclaimed. Members of the assembly are forbidden to have any association with them. They cannot eat or drink, join in any village talk, come near them at any death, trouble or in a festival, nor can any matrimonial relation be established with them. As the people say : 'They will live alone like mongrels, Doms or Sweepers'. The crowd dances before the house of the culprit. People urinate and defecate in the house and then defile it completely. Before the crowd disperses the leader of the assembly offers three fowls at the end of the village, one to Manjhi Harm[7] and one to Maran Buru on behalf of the assembly and the third to Roya Ranji Bonga on behalf of the naked jokers. At the time the fowls are offered the leader explains why the people had gathered and danced ; he also says that by doing so the assembly did not do any wrong.

IV

We may now bring out the social functions of this institution. The Bitlaha operations take the character of a hunting expedition. The members of the assembly are armed with bows and arrows, sticks etc. They are the hunters while the culprits are supposed to be the game. Their heinous crime degrades them to the status of beasts. The presence of the Dihri, the dancing, drumming and display of archery feats

makes it a ritual hunt or a *Sendra*. The songs dwell constantly on bestiality. 'We have made them cattle. They have rutted like buffaloes' (Archer 1946). Such are the reactions of the people on incest which invites a Bitlaha.

Secondly, the Bitlaha also symbolizes an *ato-bapla* or a wedding by the village. The Bitlaha crowd is the marriage party. 'The family did not marry them but the people did'. So the people say. The village brings the culprits together, exposes their secret relation and publicises it in the whole area. The leaf emblems of the sexual organs dangling on the *sal* branch and the songs of ridicule composed for the occasion with the names of the guilty couple enhances the enormity of their offence. Their secret love is robbed of all its romance.

Thirdly, the Bitlaha is the worst form of Santal punishment. Santal people want to lead a quiet and contented life in their tribal setting. The Bitlaha gives the culprit unenviable publicity. It pulls him out of his obscure setting and dangles him before the whole region. The exposure to collective shame is one of the most important social functions of this institution. It is more dreaded than physical torture or imprisonment.

Fourthly, this institution expresses the sense of defilement of the whole tribe. A soiled leaf-plate, a worn-out broom or a charred piece of wood symbolizes this in a significant way. The urination and the defecation in the house of the culprit also bring this out. Just as the house is defiled by these acts, the tribe is believed to have been defiled by the conduct of the offenders.

The Bitlaha is itself not the ceremony of outcasting. The offender is already outcasted from the date he was given the option of the fine or from the day he was sentenced to Bitlaha. It is a proclamation that an offence has been committed. The manner of this announcement, however, amounts to a punishment. For the village as for the individual offender, Bitlaha, does not lead to fresh pollution but broadcasts one that exists Both clan and kin incest pollute the village *bonga*[8] and until the culprits make amends, the pollution cannot be lifted. The village deities cannot be worshipped till the pollution lasts.

Fresh worship may begin after the sacrifice of a goat or fowls in the sacred grove (*Jahar*) and at the shrine of the Manjhi. The animals for the sacrifice have either to be found by the villagers themselves or they may compel the offender to bring these.

Before the Bitlaha, the outcasting is only known to the village. After it, it is common knowledge in the entire area. Bitlaha enlarges the circle of boycott and ensures that not only the village, but the tribe itself shall enforce the penalty. Anybody having any dealing with the outcaste is liable to excommunication. The risk of contamination by contact with the outcaste is also one of the consequences of the Bitlaha.

The dread of Bitlaha is portrayed in a number of Santal folk songs. The Santal views it with despairing submission. The songs depict the anxiety and the dread which dominate the mind of lovers who transgress the moral order. The overwhelming shame the Bitlaha brings, helps maintain the solidarity of the Santal social structure. This is the latent fnnction of Bitlaha.

NOTES

1. For a detailed bibliography see Culshaw W. J.: Tribal Heritage London, 1949. A number of titles have appeared since such as—
   Biswas, P. C.: The Santals of Santal Pargana, 1955.
   Dutta-Majumdar, N.: Santals, Calcutta, 1956.
   Orans, Martin: A Tribe in Search of a Tradition, 1965.
2. Secular headman of a Santal village.
3. Pargana or Parganait is the head of a number of villages.
4. President of the Hunt Council or the *Disum Eor*. It is the highest court of appeal in the Santal law.
5. One of the two assistants of the village headman.
6. A village official who acts as the messenger.
7. The first headman of the village.
8. Village deity.

REFERENCES

Archer, W. G. 1946 : Report on Santal Law (unpublished)

Evans-Pritchard, E. E. 1940 : *The Nuer.* Oxford University Press, Oxford.

Raichowdhry, P. C. 1965 : *Santal Parganas District Gazetteer,* Patna.

RIDGE-COUNTS AMONG THE RASTOGIS OF LUCKNOW (U. P.)

SUDHA RASTOGI

B. R. K. SHUKLA

(*Received on 19 June 1968*)

Abstract : This paper is based on a study of the a-b ridge-count of 172 Rastogis (85 male and 87 female) of Lucknow (U. P.) It presents the mean a-b ridge-count of both the hands in the two sexes. The bimanual and sexual variation in respect of this trait have also been discussed.

IN palmar dermatoglyphics a number of criteria have been employed in comparative analysis and in ethnic evaluation of different populations. The criteria based on the metrical approach present some methodological problems in handling the data, especially, in view of the fact that the growth of the palm goes on hand in hand with other parts of the body. Chattopadhyay (1966) has demonstrated that the distance between the two triradii 'increases with age' and there is sexual variation in the palmar growth pattern especially beyond eleven years of age. Fang (1950) and Pons (1964) have pointed out that the distance between the two triradii, if expressed in terms of ridge-counts rather than the metrical measurement, which no doubt is possible, could serve as a better tool in any anthropological and genetical study in ethnic evaluation. Furthermore, Pons (1964) has pointed out the genetical nature of this quantitative expression of the palmar phenotype. It has been stated that a high a-b ridge-count is controlled by a dominant gene with varying degrees of penetration, so as to give rise to a wide range of spectrum. Fang (1950) has classified the total a-b ridge-counts

The authors are attached to the Department of Anthropology, Lucknow University, Lucknow U. P.

of the two palms of an individual into low value and high value. A ridge count of 78 or below is termed as 'low' and if it exceeds 78 it is termed as 'high' (ibid.).

A number of investigators have reported a-b-ridge-counts of different populations of the world. The important studies are those of Baitsch and Schwarzfischer (1959), Bonnevie (1961), Fang (1951), Pons (1964). But very little work has been done on Indian populations, particularly in Uttar Pradesh. Datta (1961); Seth (1963); Bhattacharya (1966); Mitra (1966); Chattopadhyay and Das Sharma (1966); Srivastava and Shukla (1966); Bhanu and Malhotra (1967); Bansal (1966); Shukla and Srivastava (in press), have conducted studies on certain Indian populations. In view of the paucity of data from other populations the present paper attempts to report on the total a-b ridge-count among the Rastogis.

Rastogis are said to represent one of the subdivisions of the broader group of Vaishyas and mainly inhabit the north-western part of Uttar Pradesh. In general they represent an endogamous group.

Material and Methods

The present paper is based on the palmar prints of 172 un-related Rastogis (85 male and 87 female) obtained from the different localities of Lucknow.

For counting the ridges the usual methods suggested by Cummins and Midlo (1961 : 74) were employed.

Results

The mean a-b ridge-count of the two sexes separately, is given in Table 1. A glance at this table indicates that the total ridge-count of both the palms is slightly higher in males than in females. (See Fig.) The range of the mean values in the two palms separately is higher in males than in females. However, on an average, Rastogis have 75.26 as their mean a-b ridge-count with a standard deviation of 10.73 which accounts for the extent of scattering from the mean value.

When statistically treated by applying student's t-test, it is noted that (at 5 per cent level of significance the value of t is 1.96) the present sample does not exhibit any sexual variation in so far as the a-b ridge-counts are concerned. On the other hand, the present study also fails to record any bimanual difference in either sex (cf. Table 1).

TABLE 1

Mean a−b ridge-count of the Rastogis of Lucknow

Sex	Total no.	Right	Left	Total	
				Mean ± S. E.	S. D. ± S. E.
Male	85	36.9	39.4	76.13 ± 1.19	11.04 ± 0.84
Female	87	36.3	37.5	74.39 ± 1.10	10.84 ± 0.77
Average	172	36.6	38.45	75.26 ± 0.82	10.73 ± 0.58

The different populations which have been studied from the point of view of a-b ridge-counting have been listed in Table 3. A comparative evaluation of the mean values with their statistical constants indicates that it ranges from 68.19 to 82.89. Rastogis with the average a-b ridge-count of 75.26 fall in the normal range and show approximations to the Indians of Andhra Pradesh. Since data from other Uttar Pradesh populations is lacking, the ethnic evaluation of Rastogis cannot be attempted on the basis of a-b ridge-counting ; nevertheless it needs a recording for future evaluation.

TABLE 2

The value of 't' for sexual difference with respect to a−b ridge-counting among the Rastogis of Lucknow

Groups	Rastogis (present sample)	
	Male	Female
Male	–	1.07
Female	1.07	–

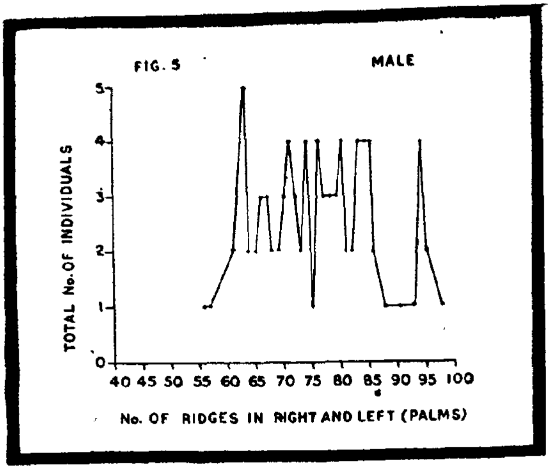

THE DISTRIBUTION OF TOTAL a-b RIDGE COUNT

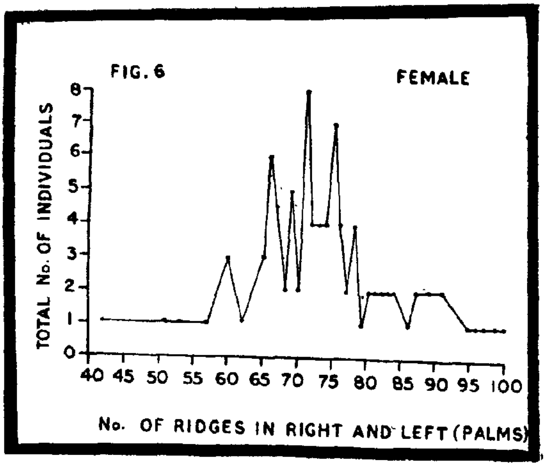

THE DISTRIBUTION OF TOTAL a-b RIDGE COUNT

TABLE 3

The value of mean a – b ridge counting in certain populations

Ethnic group	Sex	Total No.	Mean ± S.E.	S.D. ± SE.	Investigator
Indians of Andhra	M	80	76.92	8.1	Datta, 1961
Indians of Punjab	F	38	80.68	9.08	Seth, 1962
	M	62	76.42	12.48	
	Av.	100	78.04	11.41	
Maharashtrians of India	F	73	76.82 ± 0.93	7.92 ± 0.65	Bansal, 1966
	M	72	82.89 ± 0.65	5.51 ± 0.46	
	Av.	145	79.83 ± 1.24	14.91 ± 0.87	
Purbia Chamars	M	46	71.92	1.38	Srivastava and Shukla, 1966
Gujar Pasis	M	42	68.19	1.45	,,
Pathans	M	50	80.09 ± 1.56	1.53 ± 1.10	Shukla and Srivastava (In press)
Rastogis of Lucknow	M	85	76.13 ± 1.19	11.04 ± 0.84	Present study
	F	87	74.39 ± 1.10	10.34 ± 0·77	
	Av.	172	75.26 ± 0.82	10.73 ± 0.58	

REFERENCES

1. Bailsch, M. ; and F. Schwarzfisher 1959 : Zur Biometric und geographischen verteilungder Leistenzahlen in den interdigitalfeldern Hand flache. *Homo.* 10, 4, pp. 226 – 36.

2. Bhattacharya, D. K. 1966 : The a – b ridge counting of the Anglo Indians of India. Paper submitted to the international symposium on dermatoglyphics (Delhi).

3. Bansal, I. J. 1966 : Frequency of a–b ridge counting among the Maharashtrians of India. *The Eastern Anthropologist*, XIX, 2, pp. 117–122.

4. B. Vijaya Bhanu, and R. C. Malhotra 1967 : The a–b ridge count in palmar dermatoglyphics of the Izhavas of Kerala, *Man in India*, 47, 2.

5. Datta, P. K. 1960 : A study on quantitative value of palmar triradii. The a–b ridge count in the people of Andhra Pradesh. Madhya Bharati. *Saugar University Journal* (Science) 9.9.

6. Fang, T. C. 1951 : The inheritances of a–b ridge count on the 'Human hand', Ph.D. Dissertation, University of London (1950). Cited by Fang.

7. Mitra, and Chattopadhyay et. al 1966 : Inheritance of a–b ridge count in human palms. *Human Genetik* Vol.2. pp. 25–27.

8. Pons, J. 1967 : Genetics of the a–b ridge count on the human palms, *Ann. Hum. Gen.* 27, 3.

9. Seth, P. K. 1963 : The a–b ridge count in the palmar dermatoglyphics of the Indians of Punjab. *Man*, vol. 242. pp. 189–190.

10. Srivastava, R. P. and Shukla, B. R. K. 1967 : A quantitative study of dermatoglyphics of Purbia Chamars and Gujar Pasis of U. P. *The Anthropologist* XIII.

11. Shukla, B. R. K. and Srivastava, A. C. In Press : A study of the finger dermatoglyphics of the Pathans of Malihabad, Lucknow, (U. P.)

MISCELLANEOUS NOTES

I. The Concept of Class : Marx and Weber (A Comment)

In his paper on 'Class and Caste' (*The Economic Weekly*, August 25, 1965), Professor N. K. Bose has drawn a distinction between the Marxian and the Weberian interpretations of the concept of class. He has suggested that while Marx used the concept of class as an operational instrument rather than as a descriptive term, Weber tried to find out a suitable definition of the term **class** so that the widest range of observed phenomena might be covered under it with precision. This understanding of the distinction between the Weberian and the Marxian use of the concept of class appears to overlook the more important distinction between the two approaches.

In our view the more fundamental distinction between the Weberian and the Marxian views of class is related to the fundamentally divergent problems taken up by them for analysis. The central problem for Marx, in his own words, is the analysis of the 'economic law of motion of modern society' and the concept of class in his hands is an analytical tool for this specific purpose. Weber, and a whole generation of sociologists since Weber, have, on the other hand, tried to make the concept of class serviceable for other purposes, more importantly, for the analysis of social stratification.[1]

Professor Bose has argued that the Marxian distinction between 'producers and non-producers' is not capable of neat empirical identification. There is no doubt that in reality there may be, and there always is, a considerable overlap and inter-mixture of social classes.

The author is Reader in Economics at the Institute of Economic Growth, University of Delhi – 7.

The article is a comment upon the Editor's article entitled 'Class and Caste' published in *Man in India*, Vol. 45, No. 4,

Marx also is not oblivious of the existence of 'complicated gradations' within a class, which may be of considerable importance from the standpoint of having a realistic picture of social stratification. He notes the differences in 'the size of the purse' among members of the same class and so also the existence of 'diverse occupations' within a class.[2] These differences, according to Marx, are not of *crucial* importance when one analyses the dynamics of the capitalist system.

Further, the 'class structure' in its 'pure form' is the product of abstraction attempted by the social scientist and as such it is never in full accord with reality in all its details. The concept is based on what the scientist regards as the most essential aspects of reality. Such abstraction is, however, the very essence of scientific procedure. Total accord with the real situation in all its details is never possible ; at best it amounts to puerile empiricism, nay, sheer factualism. Any scientific concept is of value if it illuminates vital aspects of reality in relation to the problem taken up by the social scientist for analysis. This procedure is clearly indicated by Marx in the following passage :

'The economic structure of modern society is indisputably most highly and classically developed in England. But even here the class structure does not appear in a pure form. Intermediate and transitional strata obscure the class boundaries even in this case, though very much less in the country than in the towns. However, this is immaterial for our analysis. We have seen that the constant tendency, the law of development of the capitalist mode of production, is to separate the means of production increasingly from labour, and to concentrate the scattered means of production more and more into large aggregates, thereby transforming labour into wage labour and the means of production into capital.[3]

The validity of the Marxian concept of class depends very much on the empirical validity of the tendency of the 'law' to which Marx has drawn attention in the above passage.

In a nutshell, the view that 'class in the Marxian sense is an intellectual instrument of action and not a pure description of social phenomena into which Weber tried to convert it,'[4]

does not do full justice to the methodology of Karl Marx. In our opinion, the principal distinction between Marx and Weber lies in that **class** in the Marxian sense is a tool for the analysis of the 'laws' of motion of society and not for a 'pure description' of social stratification into which Weber tried to convert it. True, Marx believed not merely in interpreting the world but in changing it. But, according to him, the strategy of change is to be based on the analysis of the 'laws' of motion of that society which one wishes to change.

Marx's concept of class has been effectively used for analysing various forms of transition from feudalism to capitalism in both European and non-European societies. The point to investigate is how far his concept can be successfully employed to analyse and explain the dynamics of the present-day developed and underdeveloped societies.

P. C. Joshi

REFERENCE

1. Ralf Dahrendurf — Class and Class Conflict in Industrial Societies, Preface, p. viii.
2. K. Mark — Selected Writings in Sociology and Social Philosophy, p. 208.
3. Ibid. — P. 186.
4. N. K. Bose — Class and Caste, *The Economic Weekly*, Aug. 28, 1965.
5. N. K. Bose — Op. cit. p. 1340.

II. The following communication has been received from Dr. Bafe de Crespigny, Secretary-General of the 28th International Congress of Orientalists :

The 28 International Congress of Orientalists will be held at the Australian National University, Canberra, A.C.T.,

from 6th to 12th January, 1971. All scholars of the languages, history, literature and culture of Asia are welcome.

Enquiries should be addressed to :

The Secretary-General,
28 International Congress of Orientalists,
Australian National University Post Office,
Via CANBEBRA CITY. A.C.T. 2601. AUSTRALIA.

III. Dear Sir,

This is to bring your kind notice that in the introductory section of the paper entitled 'Anthropometry of the Kaibartta of Assam' by Bhuban Mohan Das and Madhu Sudan Das published in your esteemed Quarterly journal *Man in India*, Vol. 49, No. 1 (January-March 1969) it is stated that the main concentration of the Kaibartta is found in the districts of Kamrup and Nowgong. But to be more correct it should have been Nowgong and Sibsagar. It is seen in the Census publication of Assam, 1961, Vol. III, Part V-A, that the distribution of the Kaibartta population in Assam (plains) is as follows :—

Goalpara = 11,203 ; Kamrup = 19,044 ; Darrang = 23,052 ; Lakhimpur = 30,500 ; Nowgong = 34,005 ; Sibsagar = 53,099 ; Cachar = 8,565.

It may be pointed out that their distribution in the hill districts of Assam is insignificant.

Shillong, 19 May 1969

Anil Kumar Paul
(Investigator,
Census Office,
P. O. Shillong-I,
Assam)

IV. To The Editor,

MAN IN INDIA

Sir,

In Zillur Khan's article 'Cultural Fusion : a case study of St. Martin's Island in the Bay of Bengal' (Vol. 48, p. 307, 1968, Oct.-Dec.), it is stated that the island was first settled in 1880 by 14 families. Its area is 9 square miles and its population 927 (1962).

The density of population is high, being 103 per sq. mile. Dividing its population 927 by 5, the number of families is 186. If the growth of population during the 8 decades from 1880 to 1960 is purely biological, the rate of growth is some 37 or 38 per cent per decade. This is a very high rate of growth. The 14 families who migrated to St. Martin in 1880 are very likely not to have had older men and women among them. If instead of taking 5 men per family as the average, we take 4 persons per family, then the rate of increase per decade would be higher.

Apart from stray immigrtion of males by shipwreck or boat-wreck like that of the Maulavi and two fishermen who died of thirst, there must have been some voluntary immigration of both males and females.

The point requires elucidation : What are the birth and death rates in the island ? What is the economic productivity of its inhabitants ? What is the age composition of its population ?

45 B. T. Road
Calcutta—2

J. M. Datta

BOOK REVIEWS

Southeast Asian Tribes, Minorities, and Nations. *Edited by Peter Kunstadter. Vol. I, pp. xiv + 486 : Vol. II, pp. viii + 487 to 902 + 15 maps + plates. Princeton University Press, Princeton, New Jersey, U.S. 1967.* $ 22.50.

These two volumes have been published under the auspices of the Princeton Center of International Studies. The Introduction by the Editor (72 pages) is followed by sections on the following countries : Burma, China, India, Laos, Malaysia, Thailand, Vietnam. Each part is again accompanied by an introduction by the Editor. The last part, no. IX of the book, deals with the role of private foundations. Thus chapter 21 is entitled 'The Asia Foundation's Programming for 'Tribal and Minority Peoples in Southeast Asia'. There is finally an appendix on 'Population and Linguistic Application of Ethnic Groups of Cambodia'.

The chapter on India contains an account of the relation between 'Tribesmen and Low-landers of Assam' contributed by Robbins Burling.

On going through the volumes carefully one is impressed by the mass of information which has been collected with regard to the countries and communities involved. But one is, at the same time, struck by the singular character of the data collected. The special purpose of the authors, in many cases, seems to have been to discover the tensions or antagonisms which are present in their specific areas of study, and not so much in finding out where points of mutual aid or of co-operation lie between various communities. The difficulties by which the States are faced are painted in bolder relief than the successes which they have scored in the matter of incorporation of tribal economies and of cultures within larger organizations.

Some of the chapters like chapter 14 and 15 on the 'Hill Tribe Program of Public Welfare' and on 'The Tribal Research Center in Thailand' are of special interest, and may prove useful to other countries as well, when the latter are faced by analogous problems.

If we accept the essentially defence-orientation of the present

publication, and also of its frank anti-communist interests, particularly in relation to Viet-Nam, we should admit that the authors, and the Editor in particular, have done a good job indeed. But one can ask oneself the question, whether there could not be a more objective, and even more penetrating, analysis of inter-communal relationships than what has been gathered here under the stress of political and military needs.

N. K. Bose

Sorcery in Its Social Setting. *By Dr. M. G. Marwick. Pp. 339 including index, bibliography and appendices. Manchester University Press. 45 shillings nett.*

This book is a study of the Northern Rodesian 'Cewa', a matrilineal Bantu-speaking people of eastern central Africa.

The theme of the book was sketched in a paper by the author published in Africa in 1952. Dr. Marwick, who was until recently Professor of Social Anthropology at the University of the Witwatersrand, Johannesburg, is now Professor of Anthropology and Sociology at Monash University, Australia. The book contains a foreword by Dr. Max Gluckman. It is not merely a monograph on one tribe, but presents also a careful analysis of existing studies on sorcery and on conflicts in general. The author has also given various data, and his quantitative and statistical analysis are particularly useful. This fascinating analysis of both social system and beliefs will undoubtedly help research workers in the field, and present an interesting reading for general readers. Appendices and bibliography also add to the value of the book The study of the life and death of the headman of Gombi forms a very interesting chapter.

Salil K. Roy Chowdhury

Researches into the Early History of Mankind and the Development of Civilization. *By Edward B. Tylor, edited and abridged with an introduction by Paul Bohannan, published in the Sociology Series as Classics in Anthropology by Phoenix Books. The University of Chicago Press, Chicago & London, 1964. Pp. 295 with index. $2.95 or 21s. net.*

This book requires no introduction as it is one of the 19th century classics in anthropology with which Edward B. Tylor created a revolution in the pursuit of the science. This work is now introduced in the popular Phoenix edition and will thus be available

to the reading public at a cheap price. The book includes the vital and important chapters in which Tylor laid down his theories about the development and growth of human culture.

Salil K. Roy Chowdhury

The Caste System of Northern India : with special reference to the United Provinces of Agra and Oudh. *By E. A. H. Blunt. Pp. X+374 S. Chand & Co. Ram Nagar, Delhi—1. 1969. Rs. 30.00.*

Mr. E.A.H. Blunt's book was originally published in 1931 when it was very well received. Since that date there has grown a considerable interest among anthropologists in the caste system. They are now concerned, not so much with the origin and history of caste, as with the manner in which it actually works in the life of the people of India. In other words, they are interested more in the histology and physiology of the institution rather than its palaeontology, if, of course, we are permitted to use these terms from the biological sciences.

Yet, Mr. Blunt's book remains one of the best morphological accounts of the caste system in any one part of India. He was personally in charge of census operations in U.P. in 1911, and has had considerable experience in the province where he served as an administrator.

Although the author says that he has largely depended on Crooke's *Tribes and Castes of the North-Western Provinces and Oudh,* there is ample evidence that many new things have been added, while the historical reconstruction is, of course, his own. The chapters relating to Muslim ethnic groups and castes, the description of panchayats, the relationship between caste, occupation and law, form some of the most valuable chapters in the book. Mr. Blunt's description of how castes have proliferated by absorption and by fission also forms one of his important contributions.

The publishers have done well by reprinting this very useful book when there is so much new interest in India's ancient social system.

N. K. Bose

Nagin, Story of the short life of Nagin Parekh. *By Evelyn Wood, Foreword by Dr. Irawati Karve. Published by Dhananjay M. Parekh, Bombay 12, Pp. XVIII+179.*

Nagin Parekh was a young man educated in Burma, India and Oxford who eventually joined the Sarvodaya Movement in Koraput,

Orissa, where he finally laid down his life. He seems to have been a man endowed with remarkable sensitivity and high intellectual qualification. In his own work of organization of co-operatives, he brought to bear a scientific discipline which is rare among social workers.

The book of tributes paid to him by numerous admirers and co-workers is enriched by extracts from letters and reports contributed by Nagin Parekh from time to time. He faced difficulties arising, firstly, from the isolated nature of the tribal communities among whom his lot was cast. Secondly, classes in enjoyment of financial or social interests living in that area were responsible for promoting hostility against any programme which was likely to liberate the masses from their bondage. Thirdly, the Orissa Government also seem to have added to his difficulties, either on account of misunderstanding and lack of sympathy, or due to reasons in which they were justified from their own point of view.

In the end, Nagin Parekh arrived at some very important conclusions as a result of his experience. One of the reasons of failure, according to him was as follows. 'From the very beginning, our entire attitude was a reflection of our desire to uplift the down-trodden *adivasis* rather than to help them to develop through their own effort and in their own way.' (P. 165.) While admitting that the Land-gift or *Bhoodan* movement had not been successful in Koraput, he says. 'If we believe that whatever has been gained through the movement is the result of its underlying human values, we also realize that *Bhoodan*, in terms of a lost opportunity, is the direct outcome of the absence of a scientific approach towards the problems of rural development on the part of the workers of the movement.' (P. 164.)

His constructive suggestions naturally arise out of these. He finally recommended : 'Whatever claim a private agency may make, its approach must reflect finally a combination of both an official and a non-official role. Laying down the minimum in each field of activity, according to the willingness and capacity of the people, and also trying to go a little beyond, by fixing reasonable targets with the help of its workers, demonstrates the possible directions of change.' (P. 167.)

We believe that this beautiful book should prove to be of great interest to all social workers whose task is to promote the development of rural and tribal India.

N. K. Bose

Kṛṣṇa in History and Legend. *By Bimanbehari Majumdar, Centre of Advanced Study, Department of Ancient History and Culture, Calcutta University, 51/2 Hazra Road, Calcutta-19, 1969. Pp. XV. 307. Rs. 20.00.*

Professor Majumdar introduces the book in the following words : 'A student of history, who is at the same time an humble devotee of Kṛṣṇa by heredity, environment and conviction, makes an attempt here to trace the development of the ideas relating to Kṛṣṇa from the days of the *Chandogya Upanisad* to the present time.' He brings to his task a maturity of scholarship and a critical ability in the sifting of evidence which is of a very high order.

From time to time there have been attempts to dismiss the Krishna legend as a myth, as a survival of some pre-Aryan primitive cult and so on. Some scholars have also accepted the historicity of the personage in question, but have differed from one another in their assessment of facts, as well as in regard to the historical conclusions drawn. Dr. Majumdar reviews the work of these scholars with great ability. But what is most refreshing in regard to his own findings is that he does not depart from the strict principles of historical research, and is not swayed by any likes or dislikes of his own.

These lectures were delivered at the Centre of Advanced Study in the Department of Indian History and Culture, University of Calcutta. That Department and its Head, Professor D. C. Sircar, deserve our congratulation for having sponsored the series, as well as for its quick publication.

N. K. Bose

Indian Civilization, The Formative Period, A Study of Archaeology as Anthropology. *By S. C. Malik, Indian Institute of Advanced Study, Rashtrapati Nivas, Simla—5. 1968. Pp. X+204. Rs. 20/ $ 8·00/45s.*

A book like this had to written, for Indian archaeology has, on the whole, limited itself to a description of things, and has disregarded the larger task of reconstruction of the way of life of the people whose

remains or artifacts are laid bare by excavation. Dr. S. C. Malik has shown where the shortcoming lies, and he has also tried to pool together the available information and clothe the skeleton furnished by archaeologists with flesh, blood and life.

The three chapters entitled Introduction, the Background, and History, Archaeology and Anthropology contain a statement of his views as well as of his logic. These are preceded by a criticism of the present trends in the practice of Indian archaeology.

Then he turns to the Formative Period of Indian Civilization, in which he tries to present a reconstruction of society in the Neolithic and Chalcolithic periods in India. In the next chapter entitled Culture Areas, Regionalism and Archaeology, he tries to show how ecology, political history and cultural diversification have been closely intertwined with one another.

On the whole, his effort is praiseworthy : certainly his view that archaeological facts must be made to serve in the production of a total picture of the life of a people deserves support. But the feeling of the reviewer has been that some of the reconstructions of the author have perhaps overstepped the limits of legitimate speculation. Thus the un-variable character of Harappan writing over centuries has led him to conclusions about the socio-economic facets of Harappan civilization which seem to hang on rather slender strings. Yet, in justification, one can say that speculations of this kind are provocative ; although one would have been happier if such speculations had been kept within the bounds of minimal hypotheses.

The book could perhaps have been improved by less of quotations ; particularly if the views or logic of other authors had largely been summarized by Dr. Malik himself in his own words, and references given to the sources of the views expressed.

In spite of these minor shortcomings, we are sure Dr. Malik's book will provide stimulating reading to archaeologists and anthropologists alike.

N. K. Bose

Hindu Castes and Sects. *By Jogendra Nath Bhattacharya, M.A., D. L., Reprinted 1968. Pp. 496, Published by Editions Indian, 59A Shambazar Street, Calcutta-4. Printed at the Temple Press, 2 Nyayaratna Lone, Calcutta-4.* Rs. *40.00.*

The book was first published in 1896, and has long been out of

print. The publishers have done a public service in reprinting the almost pioneer classic on Hindu Castes and Sects by a Western-educated Hindu. The author was fully conversant with the traditional *Shashtric* aspect of the system with which many of the social scientists of today are not familiar because of their ignorance of Sanskrit. In reprinting the book, the original pagination could not be kept, because of cost and typographical improvements ; but the *old* paginations are given in the text within brackets—so with very little effort one can find the references quickly.

The writer has not feared to call a spade a spade. Macaulay calls Maharaja Nanda Kumar a 'Brahman of Brahmans.' But he was in fact a middle class Rarhiya Brahman whose family had once been outcasted, and regained their status by a humiliating and expensive ceremony of expiation. Rabindra Nath Tagore has shed a lustre on on the illustrious Tagore family. But he was a *Pirali* Brahman by birth. 'Of the several classes degraded by alleged intercourse with Mahomadans, the Piralis of Bengal are the most important.'

Ever since Sir George Grierson wrote that two-thirds of Hindu India are worshippers of Vishnu in some form or other, an impression has gained ground that other sects are dwindling. Dr. Bhattacharya notices :—'The majority of the Vaidiks, Rarhis and Barendras (among the Brahmans of Bengal) are moderate Saktas. They worship all the ancient deities of the Hindu pantheon ; but Durga, Kali and Siva have the largest share of their devotion' (p. 34). The Gosains of Nabadwip, descendants of the father of Vishnupriya—the second wife of Lord Gauranga are Saktas ; so are the Gosains of Khardah.

The number of Saktas and Vaishnavas are almost equal in Bengal. In the old Madras Presidency, the Saivites and the Vishnuvites are almost equal.

The book is informative, illuminating and thought-provoking. After going through the book, the intelligent reader will, like Oliver Twist, ask for a 'little more'. And if he is diligent he will pursue the the subject elsewhere. We hope and pray all social scientists should read the book.

J. M. Datta

Pre And Protohistory of the Berach Basin, South Rajasthan. By *V. N. Misra, Deccan College Postgraduate Research Institute, Poona, 1967, Pp. 1-216. Illustrated. Rs. 45.00.*

The above volume embodies the results of intensive exploration

carried out by the author in 1963-64 in the Berach Valley in S. E. Rajasthan. Work done earlier on both sides of the Aravallis is incorporated in the book.

Divided into 7 chapters, the book gives a comprehensive account of the tool-industries of the Early, Middle and Late Stone Age of the Berach basin (chapters III to V). The first short chapter deals with the land and the second with river stratigraphy and cultural sequence. The last two chapters deal with the proto-historic Ahar culture and the place of the Berach basin in the pre- and proto-history of Rajasthan respectively.

The river stratigraphy and cultural sequence as given by the author show that the Acheulian (described as Early Stone Age), whose type tool is, the handaxe, is stratigraphically correlated with the Bouldery gravel bed which overlies the bed-rock or its weathered products. This is the oldest lithic industry in S. E. Rajasthan. Next in sequence are the so-called Middle Stone Age (Middle Palaeolithic ?) industries stratigraphically correlated with the deposit of sandy gravels, separated from the former by a deposit of mottled clay. Whereas the Acheulian in Rajasthan has a wide and well-defined distribution, the Middle Stone Age industries are much less known. These latter industries typologically include cores, plain and facetted flakes and flake tools (mainly scrapers). The so-called Late Stone Age industries represented by microlithic blades and fluted cores are not found in any stratigraphical context, and are widely scattered over a large area. Whether the Late Stone Age can be equated with the Mesolithic has to be examined in the context of an overall framework of prehistoric chronology of India.

The Early and Middle Stone Age industries have been typologically described in technical details and statistically examined (chapters III-V). The Chi-square and 't'-test have been applied to study the variability within the industries with some interesting results. The Early and Middle Stone Age industries show marked differences in respect of their main tool-types, in the proportion of core/flake components and in retouched/unretouched tools. In respect of the material attributes of the flakes, the aforesaid industries show statistically significant differences. A large number of histograms and tables have been appended. All these are commendable features of the book under review. Necessarily,

however the validity of the application of the statistical methods must rest on a much larger data from *well-dated stratigraphic horizons.*

The Ahar culture is a rich proto-historic (Copper Age) village-farming culture of Rajasthan discovered in the early fifties. The type-site Ahar was re-excavated in 1961-62 under the direction of Dr. H. D. Sankalia. Dr. Misra collected a sizable number of pottery characteristic of the Ahar culture by surface exploration on which the present study (chapter VI) is based. Necessarily the inferences drawn from this evidence are tentative. The diagonstic trait of the culture is black-and-red ware with a variety of linear and dotted designs in white against a black background. The earliest occurrence of black-and-red ware is known from the Harappan culture in Gujarat. According to the author, the black-and-red pottery was diffused from S. W. to N. E., from Gujarat and Malwa to South Rajasthan. The existence of copper ores near Udaipur may have been an important factor for the early colonization of the Aharians in the Banas Valley.

The reviewer has some comments to make regarding the stratigraphy and cultural sequence (chapter II). The basal gravels in the Berach are described as bouldery gravels, whereas those in the tributary streams are described as pebbly gravels and in relevant sections they are marked with different symbols. The diameter of the gravels in the former varies between 5 cm. to 20 cm. whereas that in the latter varies between 5 cm. to 18 cm. Thus the difference is too slight to admit the use of different geological nomenclatures and symbols. These consolidated deposits may perhaps be better described as Boulder (or cobble) conglomerate. Table I (p. 16) needs some revision. As the terms Early and Middle Stone Age are chronological in the archaeological sense, they are required to be correlated with geological stratigraphy as has been attempted by the author in his studies of the river sections. In the aforesaid table, however, the Early and Middle Stone Age industries of Wagan are both correlated with pebbly gravel, whereas in all the other river sections, only the Early Stone Age industries are correlated (and rightly so) with the same deposit. Again, in the said table, under Kadmali, the Early Stone Age is placed along with the Middle Stone Age which is geologically correlated with fine sandy gravel. In the

same column (Kadmali), the Middle Stone Age is erroneously correlated with the mottled clay which is devoid of tools in the region. Unless corrected, these may confuse scholars for whom the book is intended. In the concluding chapter, however, the author has given a clearer picture of correlations in general.

For relative dating, the author states that he has no direct evidence—by which he means palaeontological evidence. Since fossils are lacking in the region, the depositional and erosional phases and implied climatic change, if any, may be explored. The author has presented useful stratigraphic data revealing a succession of characteristic sedimentary deposits like gravels, silt and clay but he has not described any erosional phases. The author must have observed unconformities or disconformities in the stratigraphic pattern of the Berach basin. By typologically comparing palaeontologically dated sites in Central India and the Deccan, he has tentatively dated the Early and Middle Stone Age industries of Rajasthan as Middle and Middle to Upper Pleistocene respectively. This method of dating, however tentative, may lead to confusion in relative chronology. The Lower (or Early) Pleistocene remains unaccounted for.

The reviewer feels that the scope of the book need not have been extended to include the Ahar culture (ch. VI) which is not a logical successor of the Late Stone Age microlithic industries in Rajasthan. There is no historical link between the two. It is however interesting to note that no farming culture earlier than the Ahar is yet known in N. E. Rajasthan. The author has done a painstaking job in presenting in a very systematic manner a substantial body of artefactual data obtained by sustained field-work and has ably and firmly placed Rajasthan, once *terra incognita*, on the prehistoric map of India. Further geological field-work, as the author proposes, may yield appropriate data for reconstructing the pleistocene chronology of the Berach basin.

The text is well illustrated and clearly printed. The price, however, is a little too high, perhaps due to a large number of photographic plates which embellish the publication.

D. Sen

The Teaching of Social Sciences in India (1947-67). *By Humayun Kabir, C. N. Vakil, A. Appadorai, H. P. Maiti, C. H. Alexandrowicz, S. Mathai, S. V. Kogekar, D. N. Majumdar, G. S. Ghurye, G. K. Ojha, Pp. 727. Universal Book and Stationery Co., Delhi-6. 1968. Rs. 45.00*

This 'pamphlet' or 'booklet', as stated in the anonymous preface of the volume, aims at providing general information and a guide for social scientists and students interested in teaching and learning social sciences in the Indian Universities. The present document grew out of Unesco surveys and regional conferences and forms part of a 'series of national booklets'.

There is a part II though the table of contents of the book does not show any part I, and in his introduction to part II Pandit G. K. Ojha (one of the contributors to this compilation) claims that the volume incorporates the latest information up to the end of 1967. In the language of Pandit Ojha, 'Readers seeking the latest and detailed information on teaching of social sciences in Indian Universities may refer to this volume with pleasant anticipations which, we hope, will be amply fulfilled.' I started reading the book with real 'pleasant anticipations' but, with apologies to Pandit Ojha, they were never fulfilled. I read the sections on anthropology and had such hard times to go through them that I did not like to read the other sections of the book. There is neither any up-to-date information in the anthropology sections of this book nor are the discussions representative or objective. There are, rather, some unsuccessful and undue attempts to glorify a small group of old-generation anthropologists.

The information has been presented in such a way as if the writer is always guessing the facts. The essays say more about a small group of teachers, most of whom died before the sixth decade of the century, and their almamaters and personal contact with some professors of international reputation rather than about their works and the teaching itself. Wherever there is any mention of their work the description is miserly abbreviated and there has been virtually no attempt to evaluate the works and interests of those teachers whose names appear and reappear in the discussion. The report is unjustly silent about the teaching and research interests of the contemporary Indian anthropologists and makes many mis-statements, over-statements and undocumented statements. For example we may illustrate, 'In India with its huge number of groups in all

stages of culture there is no room for distinguishing and clearly separating social anthropology from sociology'. (P. 158.) It is not quite understandable what the 'number of groups in all stages of of culture' has to do in distinguishing or separating social anthropology from sociology. And, I am sure, the author of the essay knows that there are a number of universities and institutions in India where differences between sociology and anthropology are not only made, they are well recognized and treated as distinct disciplines.

Referring to Prof. D. N. Majumdar, the book says, 'He has been actively connected with prison reform in the United Provinces and has included a whole paper on crime with M.A. course.' (P. 158.) I don't know how far this statement is correct, as the syllabus of Lucknow University (given at pp. 594-681 of the book) where, as far as I know Prof. Majumdar taught, does not show any paper as crime or criminology. Regarding Prof. K. P. Chattopadhyaya of the Calcutta University the writer of the essay says, 'Since his return to anthropology Professor Chattopadhyaya has been carrying on work which clearly indicates that his view of social anthropology is precisely the same as that of some American anthropologists'. (P. 157.) It is difficult to get anything out of such a statement. Nowhere in the volume is there any detailed reference to that group of American anthropologists whom Prof. Chattopadhyaya endorsed, nor does it say specifically what is the view of Prof. Chattopadhyaya or the group of American anthropologists on social anthropology. The writer does not cite any reference of Prof. Chattopadhyaya, nor does he try to justify the validity of his statement. I do not know what prevented the writer of the essay from qualifying or supporting his statement ; I suppose not space of this 727-page volume. Moreover, I was rather surprised to see that throughout the essay the author gives the impression that Prof. Chattopadhyaya is the present Head of the Department of Calcutta University, though he passed away in 1963.

Prof. Majumdar's essay, 'Special Report on the Teaching of Social Anthropology' is more representative than the other anthropology essays, though it is not very well integrated. It would, however, be more appropriate if he had said 'Trends of Social Anthropology from *an* Indian's point of view', than 'Trends of Social Anthropology from the Indian point of view.' Because, I am sure,

quite a few Indian anthropologists, including the reviewer, would not like to ditto all the comments that Prof. Majumdar had made in his essay, by and large, reads well, though the reader gets the feel that the author neglects paying any attention to the documentation aspect of writing. The last part of his essay on 'Teaching of Social Anthropology' is too sketchy. There Prof. Majumdar talks more of research than teaching and almost ignores the contribution of young Indian anthropologists in the field. His discussion of recent anthropological trends in India is not very exhaustive either.

Prof. Kabir's general introduction to the volume is scholarly, well knit, and enhances the value of the publication considerably. He, first of all, analyses the three traditions of Indian educational system in historical depth and under this background depicts the need for and process of growth of social sciences in India.

There are many typographical errors, particularly in the spelling of names. A careful editing of the volume could provide at least an uninterrupted reading.

A. K. Danda

MAN IN INDIA

VOL. 49 } OCTOBER-DEC. 1969 { NO. 4

BIJAY CHANDRA MEMORIAL LECTURES 1967

S. S. SARKAR

(*Received on 21 February 1968*)

Preface

THE accompanying two lectures were delivered at the Department of Anthropology, University of Calcutta, on the 12th and 13th February, 1968. I take the opportunity of expressing my grateful thanks to the Vice-Chancellor and the Syndicate of the University of Calcutta for appointing me Bijay Chandra Memorial Lecturer for 1967.

I

Acharya Bijay Chandra Mazumdar

Acharya Bijay Chandra Mazumdar was a legacy of the 19th century, which gave Bengal many of her illustratious sons. Bijay Chandra had the talents of a poet, a historian, an anthropologist, a philologist and a lawyer. He was born on 27 September 1861 at the village of Khatkula in the district of Faridpur in a Varendra Brahman family. His father Harchandra Mazumdar was a zemindar of repute. Bijay Chandra started his education at the Krishnagar Collegiate School. Here he had the opportunity of having the famous playwright and poet Dwijendralal Roy as his class-mate. This

association ripened into life-long friendship. A reference of it may be seen in Bijay Chandra's famous essay *Madhyanha Sangeet* which is an example of classic literature, and at one time found its place among the selected readings for the Intermediate students of the Calcutta University (1924-26).

Bijay Chandra graduated from the Calcutta General Assembly Institution in 1883. Soon he joined the Sambalpur Government School as its headmaster, prior to which he had been the guardian tutor to the princes of the then States of Bamra and Sonepur. In 1888 Bijay Chandra married Basanti Devi, the eldest daughter of Bhaktakabi Madhusudan Rao, the eminent educationist and social reformer of Orissa. In 1895 Bijay Chandra obtained his B. L. degree and started the practic of law at Sambalpur. He also acted as a legal adviser to the States of Bamra and Sonepur, and took an active part in the welfare and administration of the two States. He had settled down at Sambalpur. His doors were open to all, rich and poor, stranger and friend. In 1908 he went to London to attend the conference of World Religions and his thoughts on the philosophy of life have been embodied in his *Jivan Vani.* His eyesight began to fail and hampered his scholarly pursuits. It was at first thought to be a cataract but later on it was diagnosed as glaucoma. He became totally blind in 1914 after a surgical operation.

It is tragedy to lose one's eyesight, but Bijay Chandra did not lose heart. In fact most of his works were published after 1914.

Bijay Chandra then settled down in Calcutta, and devoted himself to writing the history of the Bengali language, which was published in 1920 by the University of Calcutta. Soon he came to the notice of Sir Asutosh Mookerjee, who appointed him as a Lecturer in the newly created departments of Anthropology and Modern Vernaculars. He had already come in contact with the aborigines of Central India, particularly the Kols. His knowledge of philology was of great help in anthropology. He was one of the earliest authorities to point out the presence of Dravidian words in the Sanskrit language. I remember with profound respect the day when

he explained the Maler vocabulary collected from the field by me. He had a deep knowledge of Sanskrit, Pali and Oriya and made veritable contributions in these fields of research.

In his postgraduate classes he used to teach Westermarck, whose works are not nowadays so much read. I still remember how vividly he lectured upon Westermarck's Theory of Aversion. He had his faith in it, so to say.

Biyay Chandra's association with Keshab Chandra Sen and Pandit Sivanath Sastri drew him into the religious sphere. He was deeply nationalistic and his poem *Bharat Pataka* was a national song of the day.

Bijay Chandra died on the 30 December 1942 full of honours. His legacy is now being upheld by his equally gifted only daughter, Mrs. Suniti Sarkar, to whom the present endowment-lecture in Anthropology is due. All anthropologists will acclaim it as a worthy commemoration of a worthy father.

In spite of his losing eyesight, the indomitable spirit of Acharya Bijay Chandra Mazumdar guided him the last 28 years of his life and it was no less a glorified one. Let his spirit be a source of inspiration and emulation to all the future workers in the field of Anthropology.

I am deeply indebted to Mrs. Tapati Mukherjee, grand-daughter of Acharya Bijay Chandra Mazumdar for her kind help in presenting this short biography. Thanks are also due to Miss Ratna Mallick for the following bibliography prepared from the library of Acharya Mazumdar, access to which was very cordially extended to us by Professor Bijali Behari Sarkar and his wife, Sunity Devi, who is responsible for the present endowment.

BIBLIOGRAPHY

Literature

Kheladhula	Kedar Nath Chatterjee 120/2, Upper Circular Road, Calcutta
Jiban Vani 1934	Narendra N. Kongar 203/1/1, Cornwallis Street, Calcutta
Heali 1916	Priya Nath Bhattacharja 25, Sukia Street, Calcutta

Ruchira 1938	Author, 33/3, Lansdowne Road, Calcutta
Udanam	Sadhana Library, Dacca
Chinte-phota	Pramatha N. Sen, 15, College Square, Calcutta
Prachin Sabhyata	Chittaranjan Gupta, 24, Middle Road, Calcutta
Katha-nibandha 1906	Mazumdar Library, 20, Cornwallis Street, Calcutta
Therigatha	Sadhana Library, Dacca
Panchak-mala 1910	Sen Bros. 5, College Street, Calcutta
Kalidasa 1912	Abinash Sarkar, 211, Cornwallis Street, Calcutta
Tapasyar-phal 1913	Abinash Chandra Sarkar, 211 Cornwallis Street, Calcutta
Sachchidananda – Granthabali 1913	Abinash Chandra Sarkar 211, Cornwallis Street, Calcutta
Jayadev-O-Gitagobinda 1965 (Reprint)	Sushil K. Sinha 84A, Sambhu N. Pandit Street, Calcutta
Bidrupa-O-Kalpa 1948	Kartik Ch. Datta 211 Cornwallis Street, Calcutta
Katha-O-Vithi 1951	
Yajna-Bhasma 1905	
Phula-sar 1905	
Tiktiki 1921	
Typical Selections from Oriya Literature (Vol. I, II, III) 1923, 1925	University of Calcutta
The History of Bengali Language 1920	University of Calcutta

History

Bharat-Varsher Itihas 1926	Published by the Author
The Chauhan rules of Sonpur 1925	Published by the Author
Orissa in the making 1925	University of Calcutta
Sonpur in the Sambalpur Tract 1911	A. C. Sarkar 211, Cornwallis Street, Calcutta.

(Papers)
Maranja-Mura Charter of Maha Siva Gupta Alias Yayati Reprinted from The Journal of the Bihar and Orissa Research Society Vol. II page 45–49, March 1916
The Band Charter of Kanak Bhanja Deva (Circa 1475 A. D.) Reprinted from The Journal of the Bihar and Orissa Research Society Vol. II, September 1916
Singhara Plates of Ranaka Ranabhanja December 1920 Page 481–486
Kumurukela Charter of Ranaka Satru Bhanja Deva (Circa 1323 A. D.) Page 429–435 Vol. II, December 1916

Ancient History

The Origin and Character of the Purana Literature Sir Asutosh Mookerjee Silver Jubilee Volumes Reprinted from Vol. III (Orientalia) 1921	University of Calcutta

Social Anthropology

Aborigines of the Highlands of Central India 1927	University of Calcutta
Elements of Social Anthropology 1936	University of Calcutta
Yugapuja-O-Dharma Visvas 1893	

Miscellaneous

Reprinted from Indian Culture Page 565–597, Vol. II, No. 3
"Amritam"
Page 594–595

II

Mating System and Marriage

'Still to-day the questions that most affect our well-being or even continuance on the earth as individuals, as families, as nations, or as a species,—the questions of heredity, eugenics, birth-control, sterilization, divorce, the place of woman and the care of the child,—they are all merely aspects of the central problem of marriage. Into the making of a proper account of marriage there enter biology, physiology and embryology, psychology, enthnography, folk-lore, the study of magic and religion, economics, law.'

Havelock Ellis

The Biological Urges

All living beings, mice or men, are guided by two fundamental biological urges. First is the urge for survival. It is primal and deeply rooted and is rather 'completely and uncompromisingly selfish' (Pearl, 1939). Its 'net accomplishments and final consequences' are quantitatively expressed by mortality rates.

The second is the reproductive urge and is really an extension of the first. It is measured quantitatively by birth rates. There are various forces which curb down its full expression in man and two of them, according to Pearl, are of particular importance in man. The first is legal, since mankind demands the legal rite of marriage as a pre-requisite to reproduction. The second restrictive force is hedonistic, commonly known as birth control. Mankind discovered it long ago, not out of the social welfare in general, but out of the same selfish urge connected with survival. As Raymond Pearl puts it : '... ... a desire on the one hand to have more fun out of life without having to pay for it, and a shrewd estimate that the chances of prolonged individual survival of self and children will be enhanced if there are too many of the latter'.

I shall try to go into details of these forces operating among the three high caste populations of Bengal, namely the Brahman, Kayastha and Vaidya.

I will first of all try to delineate the nature of the first restrictive force, namely legal, as seen in variations in mating

systems. It is worth while however before all to discuss the socio-biological significance of marriage as it stands today among the above three caste groups. Divorce has complicated marriage and we have also divorce laws since 1948. Betterment of social conditions in the Western countries has not in any way decreased the frequency of divorce rates, rather there is a tendency to rise (Slater and Woodside 1951). There is a group of thinkers who speak of the bankruptcy of the institution of marriage though Westermarck (1936) has proclaimed that marriage as a social institution is bound to survive as a permanent feature of sex-relationship.

On the other hand, recent studies of animal behaviour, specially of the anthropoid apes, do not support the animal origin of the institution of marriage, which had its 'fundamental impulse' (Ciocco 1938) from the Darwinian theory of organic evolution. Ciocco rightly points out : '...... the human mating differs from that of animals not only because of the so-called super-organic factors, but because in man the economic, sexual, reproductive and companionship factors are all at the same time actually or potentially manifest'. He further says : 'that once the concepts of the suggested primeval pattern are discarded, their (Westermarck and Briffault) studies bear on the development of marriage in terms of the co-existence of the economic and sexual-reproductive factors.'

Birth Control

Another complicating factor in modern marriage has been the practice of birth control, of which a brief mention was made before. It offers no challenge to the continuation of the institution of marriage as long as the reproductive urge is there. But complications are apparent when great thinkers like Bertrand Russell try to see sex and marriage separately. In his *Marriage and Morals* (1958) he writes : 'I think that all sex relations which do not involve children should be regarded as a purely private affair, and if a man and a woman choose to live together without having children, that should be no one's business but their own.'

An ardent supporter of Judge Ben Lindsay's companionate

marriage, Lord Russell elsewhere says: 'If the bonds of marriage are recognized as final and irrevocable, there is no stimulus to the imagination to wander outside and consider that a more ecstatic happiness might have been possible.' The same authority is also of opinion: 'At present a marriage is null if sexual intercourse is impossible, but children, rather than sexual intercourse, are the true purpose of marriage which should therefore be not regarded as consummated until such time as there is a prospect of children.'

These revolutionary ideas, which are beyond the norm of the average Westerner and are much behind that of this country, are gradually pervading the minds of the young literates, who are always forward to quote Russell, but it boils down biologically to the same selfish motive of urge for survival.

Lord Russell speaks of the impossibility of 'more ecstatic happiness' in the case of fixed bonds of marriage, but let us see what Hedy Lamarr, 'the most beautiful woman of the century,' has to say of ecstacy in her autobiography (Lamarr, 1967). Hedy Lamarr 'had six husbands and on a rough count 150 lovers.' She had an ecstatic life and now at her age of 51 years, she is 'going without food for days'. And she states: 'I think most American women dislike men and the man they dislike most is their husband'.

Ecstasy, how so ever temporarily delightful it may be, is associated with a morbid state of nerves as in a trance or a frenzy. It is probable however that ecstasy has different points of view for a man and a woman. And can temporary delights, specially those related to sex life, lead to anything tangible towards human happiness? On the other hand, such ecstatic behaviours in a society are likely to bring in sexual competition among its members, which is never good for their integration. It will no less hamper the growth of personalities. Simpson (1965) has rightly observed: 'A basic problem for all of us is the integration and ethical development of our own personalities.' His definition of man, namely, 'Man is a normal animal', is probably better than qualifying man as a 'tool-making animal'.

Women and Marriage

The woman's point of view of marriage and family appears to be the guiding factor in marital happiness. Ciocco (1938) in analysing the cohesive and disruptive factors in a marital group of 390 American women found that 'over 70% of women have no intention of breaking their marital ties'. And 'the number of women who desire to take active steps to correct the situation and eliminate the conflict is greater than the number of those who apparently have a definite desire to end the marital union.'

The above study led Ciocco to hold that 'marriage is essentially an economic and sexual-reproductive union' and 'cannot be regarded simply as a manifestation of man's acquiescence to social pressure. Its far deeper foundation is so obvious that only few of the women express the need to rationalize about their desire to stay married or to justify this desire by introducing religious or ethical principles'. This 'far deeper foundation' is probably the same urge for survival which is justified by the ethics of maternity. The desire for maternity alone guides a woman to accept a man. That urge alone causes her to surrender to a person unknown. That is why women are endowed with so much forbearance. There are signs of the gradual waning of this forbearance in the present-day industrial civilization and along with the emancipation of women. Cajal (1951) pointed out long ago that 'as soon as she enjoys a talent and culture ordinarily thought of as belonging to men, a woman loses the charm of modesty, acquires dominating airs and lives in a perpetual state of exhibition of her cleverness and ability.'

This change in women's attitude and behaviour, which is more often directed towards the child than the male, causes no less change in fertility. Some women get themselves sterilized before the birth of any children. The joint enquiry into birth control practices by the WHO (1957) and the Government of India revealed 13 cases of such women in the Lodi Colony, New Delhi. A few such cases are also known to me as a result of a private enquiry in Delhi during 1950.

Emancipation of women is destroying their modesty just as intemperate birth control practices, which hinders resistance to a number of toxic agents, are robbing their beauties. Soon they are transformed into 'dried-up old spinsters', an analogy used by Axel Munthe (1960) for the moon.

Selection in Marriage

Marriage among the three upper castes of the Bengali Hindus is controlled by exogamous *gotras* though there are a few instances of marriages within the *gotra*. The usual practice is to avoid seven generations from the father's side and five generations from the mother's side. This rule of avoidance appears to have been laid down in Hindu society of North India rather late, since the age of the *Dharmasutras* (600-300 B.C.). Later on it was enforced by Manu. Kapadia (1955) has reviewed the ancient literature and is of opinion : 'It is quite clear that in the *Dharmasutras* and *Manusanhita* marriage of cross cousins, which was allowed in the time of Brahmanas, had come to be discredited and upheld as proper only in those parts of the country where they could be justified because of the peculiar social conditions'. Kapadia also points out that cross-cousin marriage was practised by 'the outlandic Indo-Aryan peoples' outside the middle region or Madhyadesa. Kapadia appears to disagree with the restrictions of the Hindu Code Bill, which lays as a condition of valid marriage for persons outside five generations on the father's side and three generations on the mother's side, unless permitted by local custom. Kapadia writes : 'As a matter of fact, in these days when individual choice of a partner in marriage has come to be recognized as necessary and desirable even by the older generation, any artificial shackles in the form of exogamous restrictions are outmoded. It is to be desired that in the Act when it emerges, this *sapinda* exogamy may be restricted to three generations on both sides. This legal narrowing down of the prohibited degrees does not prevent any person avoiding five or even more generations if he so chooses, but it removes unnecessary restriction which have no cultural or biological significance'.

This takes us to the incest taboo and the mating systems of some animals. In the various species of Protozoa, the usual form of reproduction is the fission of the body into two halves. But in the process of conjugation two animals from the same clone rarely come together to conjugate, rather they are from two different clones. Corner (1947) in describing late Professor Jenning's observation of this fact in *Paramecium bursaria* writes : 'By studying an immense number of animals of the species *Paramecium bursaria*, the investigators found that the whole population of the species is distributed into several "mating types" such that an individual of one type will mate with one of another type, but not with one of its own'.

The Canada Goose (Aberle *et al.* 1963) is again an example of outbreeding, *par excellence.* Among these birds, individuals from other families only mate. Siblings and opposite sexed parent are avoided. Aberle *et al.* write : 'The luckless breeder who takes a male and a female from the same brood to raise geese is doomed to disappointment : the pair will not mate even if no partners are available. If, however, two members of the same brood are separated before hatching occurs and are subsequently re-introduced to each other having been raised the different families, they may become mates'. It has also been pointed that 'close inbreeding might not be deleterious to animals which mature quickly and have numerous offspring'.

As regards inbreeding in man Aberle *et al.* say : '...as we move from (biologically defined) second cousin matings to first cousin matings to parent-child or sibling matings, both the models of population genetics and the experimental and observational evidence from animals indicate that the reduction of heterozygosity increases rapidly, and hence that the percentage of individuals homozygous for lethal or deleterious recessive genes also rises sharply.'

The second cousin matings mentioned above obviously fall into fourth generation and as sueh Kapadia's advocacy of third generation from each parent is not biologically sound. We have no statistics regarding the frequency of the different types of marriages following the different rules of avoidance. Only a National Commission on Marriage can provide such information. In fact the many Marriage Acts, beginning with

the Widow Remarriage Act of 1856 to the Hindu Code Bill of 1948, were not preceded by any scientific enquiry as done by the British Royal Commission on Population, 1945-47.

Let us now see how far the rules of avoidance in marriage among some castes have been violated.

Mrs. Bela Gangopadhyay (1964) has provided us with some data as regards the rules of avoidance not followed in marriage. Her data comprise the following Bengali castes: (1) Brahman, (2) Kayastha, (3) Gandha-banik, (4) Byagra-Kshatriya and (5) Hadi. Both rural and urban samples of the first two castes were studied. Gandha-baniks are mainly urban while the last two castes are rural and of lower social rank. A total number of 2854 marriages was examined and the pedigree method of study was followed all through. Gangopadhyay found 31 cases of violation of caste endogamy but remaked that the consanguineous marriages 'may be treated as deviations.'

Gangopadhyay found six instances of consanguinity, of which one belonged to Kayasthas, four to Gandha-baniks and one to Byagra-Kshatriya (Tentulia). Among Brahmans two instances of marriages between cousins related through step-mother were recorded (Fig. 1).

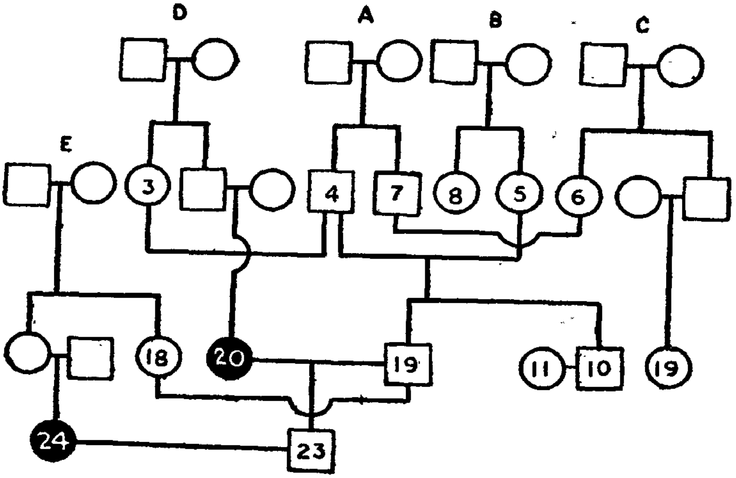

FIG. 1.
POLYGAMY AND MARRIAGE BETWEEN STEP PARALLEL & CROSS CONSINS ● (REDRAWN AFTER GANGOPADHYAY, 1964, FIG. 1: 4, SERIAL NOS. WITHIN SYMBOLS SAME)

The Kayastha consanguineous marriage (Fig. 2) was between

the children of two parallel first cousin sisters or two full second cousins. Gangopadhyay has not recorded any issue of the union but, assuming an offspring, its co efficient of inbreeding would be .0156.

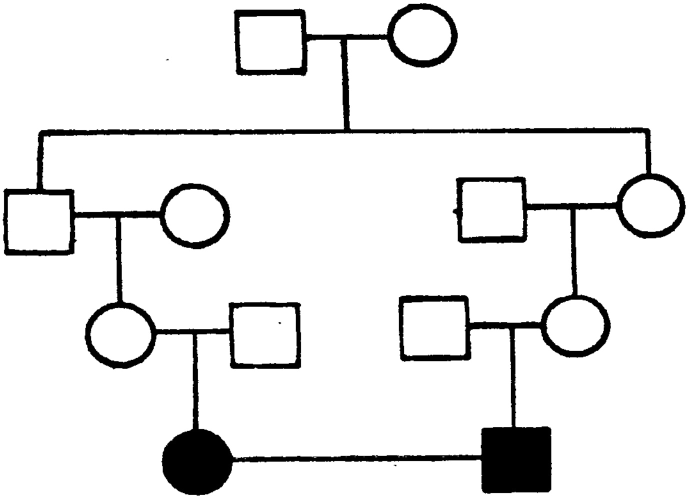

FIG. 2.

INBREEDING AMONG DAKSHINA-RADHI KAYASTHA (AFTER GANGOPADHYAY, 1964)

The four Gandha-banik consanguineous marriages are shown in Figs 3-6. The marriages shown in Figs. 3-4 are between a pair, genealogically related as uncle and niece or full second cousins once removed. Both show the same co-efficient of inbreeding (.0078) if offsprings are assumed.

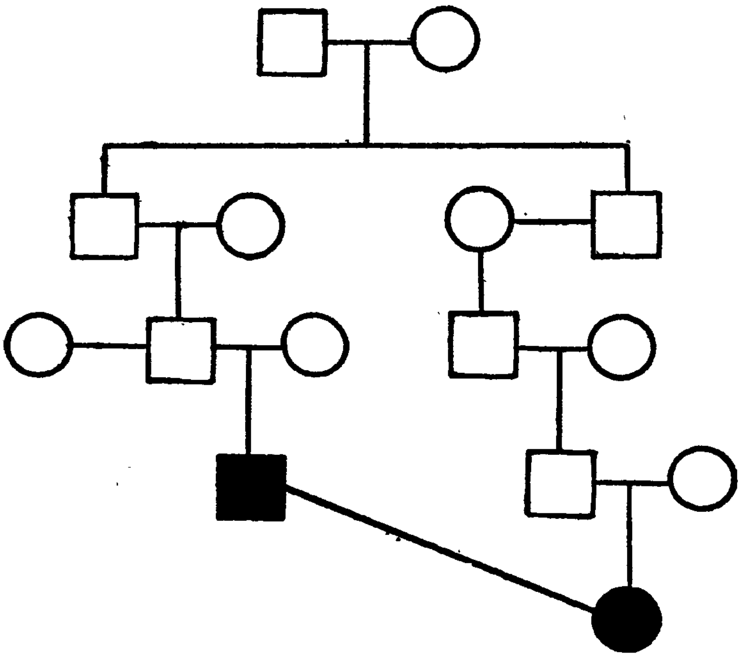

FIG. 3.

INBREEDING AMONG GANDHA-BANIK (AFTER GANGOPADHYAY, 1964)

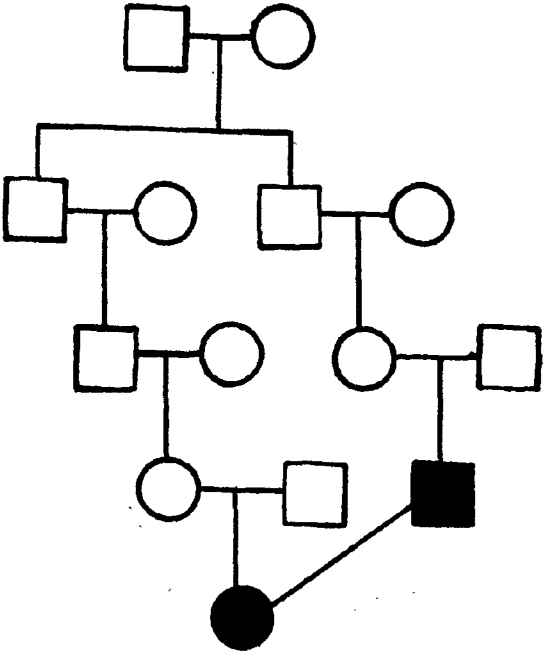

FIG. 4.

INBREEDING AMONG
GANDHA - BANIK

Figs. 5 and 6 show marriages between two full second cousins having co-efficients of .0156 when offsprings are assumed.

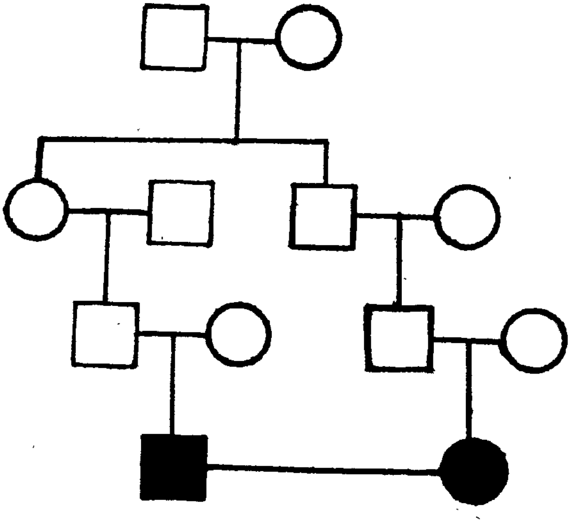

FIG. 5.

INBREEDING AMONG GANDHA - BANIK

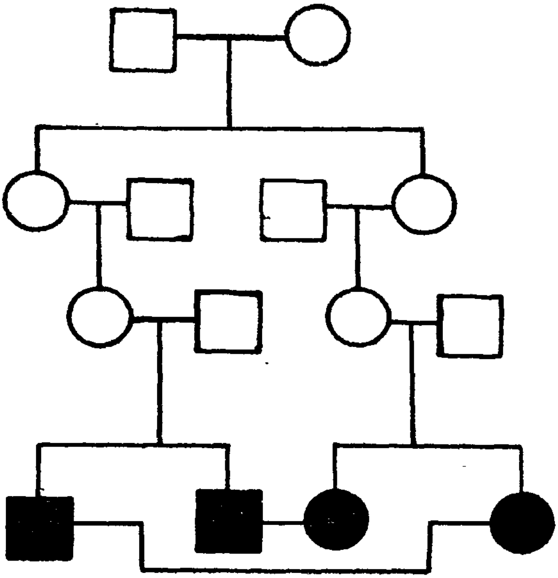

FIG. 6.
INBREEDING AMONG
GANDHA – BANIK

The co-efficients of inbreeding for the four Gandha-banik consanguineous marriages therefore vary between .0078 and .0156, showing an average of .0117. The total population of this caste is not known but it is mainly confined to towns and the city of Calcutta, where they get better opportunities for

trade. About 95% of Gangopadhyay's data are from the city of Calcutta. It appears to be a small population.

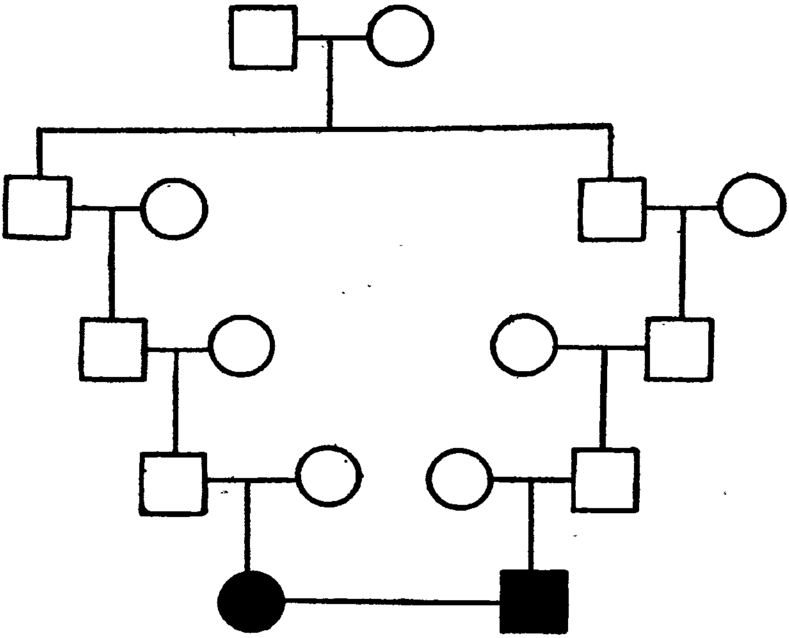

FIG. 7.

INBREEDING AMONG BYAGRA – KSHATRIYAS

Fig. 7 shows an instance of inbreeding among the Byagra-Kshatriya between full third cousins. The co-efficient of inbreeding for an assumed offspring would be .0039.

The rates of inbreading are therefore as follows :

Kayastha	—	1/518 = .0019
Gandha-banik	—	5/573 = .006
Byagra-Kshatriya	—	1/457 = .0021

Apart from the above data, the present author is aware of two matings between full first cousins among the Dakshin-

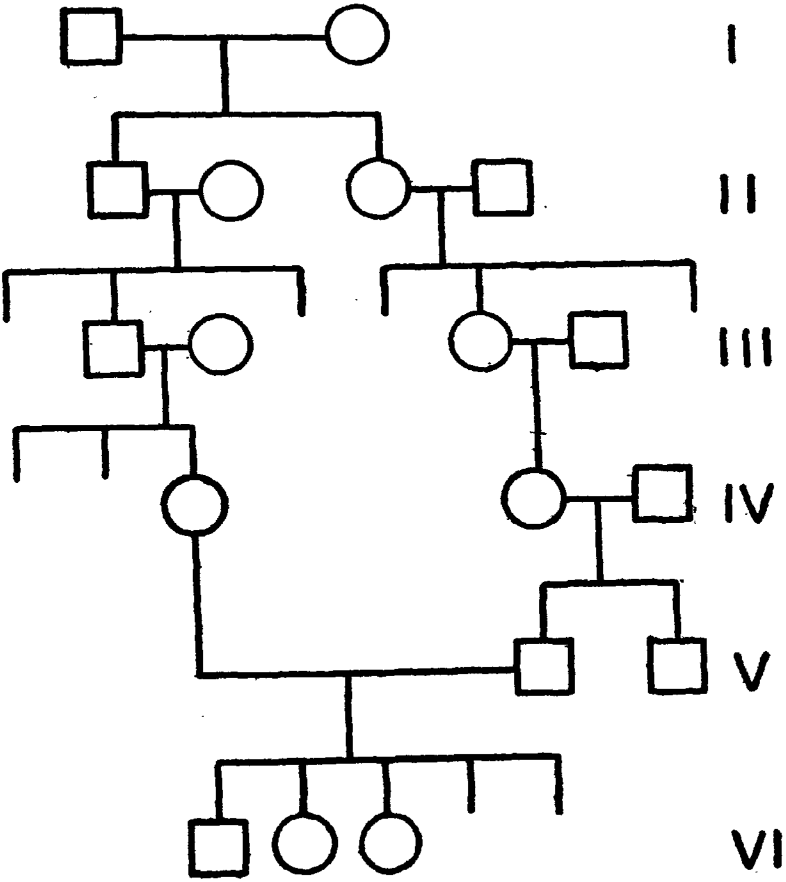

FIG. 8.
INBREEDING AMONG
DAKSHIN RARHI KAYASTHA

Rarhi Kayasthas who would show the highest inbreeding co-efficient of .0625 in case of an offspring. Another case (Fig. 8) of inbreeding from among the same Kayastha caste showing a mating between two second cousins once removed shows a co-efficient of .0078 (Sarkar 1967). The average co-efficient for the Dakshin-Rarhi Kayasthas, for all the four matings mentioned above thus comes to .0337.

It must be mentioned here that I have assumed an offspring for the calculation of the co-efficients of inbreeding, but there are some evidences of complete control of progenies in a few cases of inbreeding. It may be due to lack of recognition of such offsprings in the society. It is however difficult to distinguish the above social obloquy from the selfish urge (usually on the part of males) and involuntary sterility. I have known a few instances of childless marriages, the difference of ages between the partners of marriage being very high. Usually the husband is between 40-45 years while the wife is between 20-25 years. Such marriages appear to be frequent among urban literates and only a National Commission on marriage will be able to find out its frequency.

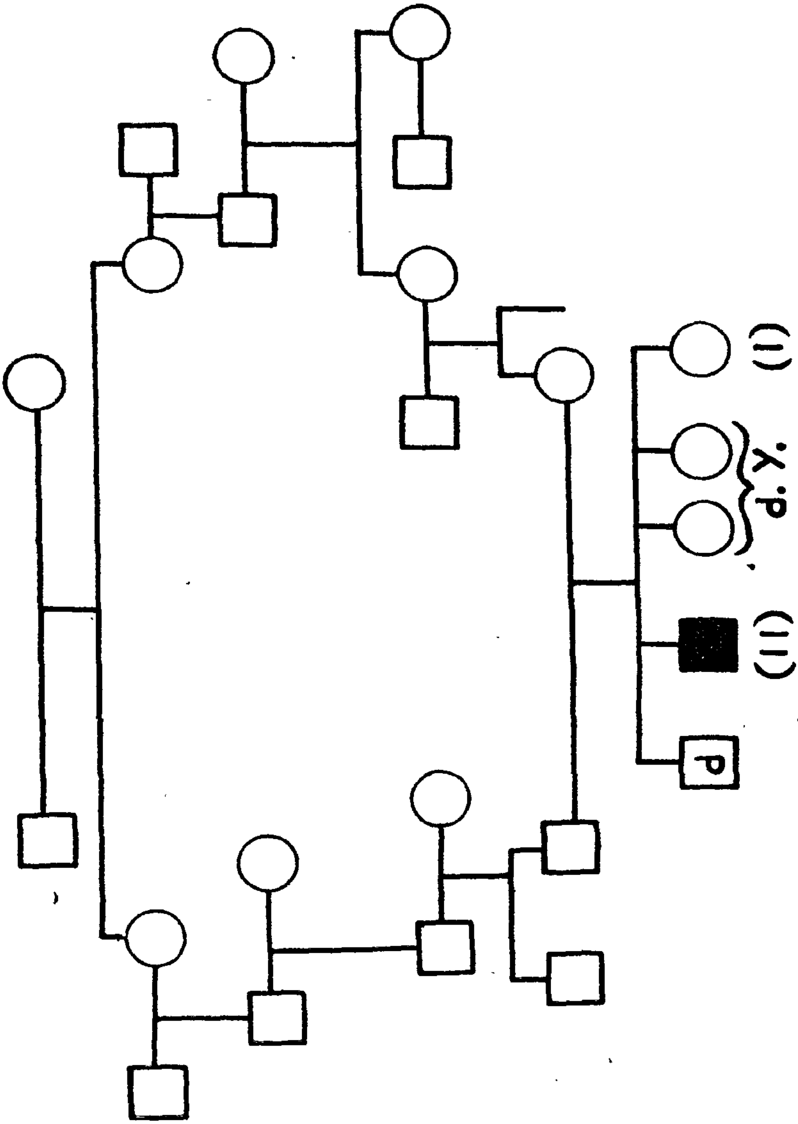

FIG. 9.

INBREEDING AMONG
BAIGA OF MADHYA PRADESH

A full third cousin mating (Fig. 9) was also reported by Sarkar (1967) among the Baiga of Madhya Pradesh. It showed the same co-efficient of .0039 as the Byagra-Kshatriya.

Cousin marriages are more widely practised in South India and Mahasrashtra than in North India. Kapadia has summarized the various instances of cousin marriages in the *Mahabharata* and in other literary writings. In eastern India it has been traced in the Sakya family in which both Buddha and his father married their mother's brother's daughters. These marriages should not be overlooked as merely exceptional but might be traits of an old culture once widespread throughout India. Various explanations have been offered for the justification of cousin marriages and Kapadia syas 'that by the 7th century A. D. marriage with a cognate in the third generation had become so undesirable that the old traditions in favour of it had to be explained away by saying that such marriages were either conditioned by circumstances or that they were not really marriages with one's cross-cousins.' The custom thus appears to have been out of vogue in North Indian Hindus rather recently, but Muslims and Christians have been practising it even now.

Dronamraju (1960) and Sanghvi (1965) have provided some data on inbreeding frequencies from South India. Ghosh (unpublished) has been working on the Kota of the Nilgiris, who practise cousin-marriages, and I am thankful to him for allowing me to use his unpublished data. From the Kota pedigrees so far analysed, the average co-efficient of inbreeding for the Kota appears to be .0321. The inbreeding co-efficients so far known from India are given in the table below :

TABLE 1

Inbreeding Coefficients

Locality	Sample	Coefficient	Author
Andhra Pradesh	Married in-patients of King George Hospital	.028	Dronamraju

Table 1 (Cont.)

Locality	Sample	Coefficient	Author
Vishakapatnam	Parents of School Children	.019	,,
Andhra Pradesh	Rural	.032 for autosomal genes	Sanghvi
do.		·051 for sex-linked genes	,,
Bombay	Brahmin, Kayastha and P. Prabhu	.001 – .003	,,
do.	Maratha, Agri and Mahars	.005 – .007	,,
do.	Muslim, Parsi	.006 – .013	,,
do.	Christian	.001	,,
West Bengal	Kayastha	.034	This study
do.	Gandha-banik	.012	Gangopadhyay
do.	Byagra Kshatriya	.004	,,
Madhya Pradesh	Baiga	.0014	Sarkar
Madras	Kota	.032	Ghosh

Geneticists have clarified the old theory of inbreeding, which was held to cause deterioration of the stock. Inbreeding does not cause any deterioration of the stock but brings to light the deleterious and lethal recessive genes.

The effects of cousin marriages in South India have not been studied and the nature of the deleterious recessive genes is therefore not known. Inbreeding however brings in homogeneity in the population which is however much more marked in South India than in the North. This is again a problem for the proposed National Commission on Marriage.

The few cousin marriages known to me are the results of personal choice and as such partly falls within assortative mating. Obviously the similarity of the partners in physique, in temperament and in many other factors was the basis of liking. Some authorities (Slater and Woodside 1951) prefer

assortative mating for the betterment of society. They say: 'It tends to increase the variability of the population, to increase the numbers of persons showing an extreme degree of a quality, and to decrease the proportion of persons near the average.' They are all quite good for the betterment of the society but can we make an assortment in a human society? A society bound up by traditions has a limited choice and can rarely be random in nature. Rather better assortment was practised in contracting marriages in early Hindu society, where marriage distances were far greater than what it is at present. The range of exogamy appears to be gradually shrinking.

Intercaste Marriages

The range of exogamy and endogamy vanishes with inter. caste marriages. Gangopadhyay has come accross nine cases of intercaste marriages out of 2854 marriages (3.2%) but did not mention the castes of both the partners contracting marriage. Her data however show higher frequency of Kayasthas than the other castes. She found two cases among Brahmans, three among Kayasthas, one among the Gandha-banik, two among Byagra Kshatriya and one among the Hadi. There is no earlier data to compare with Gandopadhay's findings.

In Bombay however intercaste marriages appears to be gradually increasing as the following table from Kannan (1963) show.

TABLE 2

Frequency of Intercaste marriage in Bombay

Year	Frequency	Percentage
1917	1	0.4
1926-30	1	0.4
1931-35	5	2.0
1936-40	8	3.2
1941-45	17	6.8
1946-50	58	23.2
1951-55	85	34.0
1956-59	75	30.0
	250	100.0

The sudden rise of the frequency from 6.8% for the year 1941-45 to 23.2% during 1946-50 is due, according to Kannan, to the Hindu Marriage Disabilities Removal Act of 1946 and the Hindu Marriages Validity Act of 1949. The castes involved in the above data are not also available.

The present author has at his disposal some data on 34 intercaste marriages from among three high castes of Bengal, which are presented below. The Brahman data could be subdivided into the three endogamous division, namely, Rarhi, Vaidik and Varendra. As in the case of Gandha-baniks, the total population of these three subdivisions of Brahmans are not known but the latter two groups are numerically much less than the Rarhi. The data are as follows :

TABLE 3

Scheme of Intercaste Marriage

		Male	Female
1.	Rarhi Brahman	a	b
2.	Vaidik Brahman	a	b
3.	Varendra Brahman	a	b
4.	Kayastha	a	b
5.	Vaidya	a	b

If each caste is numbered according to the serial numbers given above and the two sexes of each caste as *a* for male and *b* for female then there is possibility of 20 matings. The frequency of these 20 matings is as follows ;

TABLE 4

Frequency of Intercaste Marriages

Rarhi Brahman	1a × 2b	—	0
	1a × 3b	—	2
	1a × 4b	—	2
	1a × 5b	—	3
			7
Vaidik Brahman	2a × 1b	—	0
	2a × 3b	—	1
	2a × 4b	—	2
	2a × 5b	—	0
			3
Varendra Brahman	3a × 1b	—	0
	3a × 2b	—	0
	3a × 4b	—	2
	3a × 3b	—	1
			3
Kayastha	4a × 1b	—	3
	4a × 2b	—	1
	4a × 3b	—	4
	4a × 5b	—	6
			14
Vaidya	5a × 1b	—	2
	5a × 2b	—	1
	5a × 3b	—	0
	5a × 4b	—	4
			7
			34

The above table will give an idea of males of each caste while that of females will be seen below.

TABLE 5

Women involved in Intercaste Marriages

Rarhi Brahman	–	5
Vaidik Brahman	–	2
Varendra Brahman	–	7
Kayastha	–	10
Vaidya	–	10
		34

Though nothing could be said out of such small data, it is probable that Kayastha males are more prone to intercaste marriages than the other castes. The same is borne out by the Kayastha females as well, although their number agrees with Vaidyas. Gangopadhyay also found the highest number of Kayasthas in her sample. The Vaidik Brahman group shows the lowest frequencies for both sexes but the higher number of Varendra Brahman and Vaidya females than the respective males is noteworthy. Anything may however happen with a small sample and the above observations are merely explanatory in nature.

The Kayastha males however occupy the lowest position when international marriages are taken into account, as given in table 6.

TABLE 6

Indian X European Marriages

Brahman	(m)	×	European	(f)	–	16
Brahman	(f)	×	European	(m)	–	1
Kayastha	(m)	×	European	(f)	–	13
Kayastha	(f)	×	European	(m)	–	2
Vaidya	(m)	×	European	(f)	–	17
Vaidya	(f)	×	European	(m)	–	1
						50

We require more data. Almost nothing is known of the various marriage practices although so many laws have been promulgated ; and a few of them are dead laws, so to say. Widow remarriage has not gained much currency among the three castes here discussed in spite of its being one of the first and the oldest law of the country. Gangopadhyay did not find a single case of widow remarriage in a total of 457 marriages even among the Byagra-Kshatriya of Howrah. Nor was it found among the same caste of a village in the district of 24-Parganas, West Bengal, as a result of enquiries by Miss Poddar (unpublished). On the other hand the existence of the law alone confuses western scholars like Stycos (Hardin, 1963), when he writes : '...in India, the break down on taboos on the remarriage of widows could lengthen the average reproductive period.'

I have already said that a National Commission on Marriage is the earliest desideratatum befor we have any applied programme on family planning or birth control. I proposed it in my presidential address at the Anthropology Section, Indian Science Congress, Bangalore, 1951. It has fallen on deaf ears. But if we do not want to know ourselves we are not scientists.

REFERENCES

Aberle, D. F., Bronfenbrenner, Urie, Hess, E. H., Miller, D. R., Schneider, D. M., Spuhler, J. N. 1963. The Incest Taboo and the Mating Patterns of Animals, *Am. Anth.*, 65, 253 – 265.

Cajal, S., Ramon, Y. 1951. *Precepts and counsels on scientific investigation : Stimulants of the spirit* – (Translated from Spanish), California.

Ciocco, A. 1938. On Human Social Biology II. Disruptive and Cohesive factors in the marital group. *Hum. Biol.*, 10, 555 – 574.

Corner, G. W. 1947. *The Hormones in Human Reproduction*, Princeton.

Dronamraju, K. R. and Khan, P. Meera, 1960. Inbreeding in Andhra Pradesh. *J. Heredity*, 51, 238 – 242.

Gangopadhyay, Bela, 1964. *Marriage regulations among certain castes of Bengal*, Poona.

Hardin, Garrett 1963. *Population, Evolution, Birth Control*, San Francisco.

Kapadia, K. M. 1955. *Marriage and Family in India*, London.

Kannan, C. T. 1963. *Intercaste and Inter-community marriages in India*, Bombay.

Lamarr, Hedy, 1967. Ecstasy and Me, (Review in *The Statesman*, 16 April 1967, Calcutta).

Munthe, Axel, 1960. *The Story of Saint Michael*, London.

Pearl, Raymond, 1939. *The Natural History of Population*, London.

Russell, Bertrand, 1958. *Marriage and Morals*, London.

Sanghvi, L. D. 1966. Inbreeding in India, *Eugenics Quart.*, 291–301.

Sarkar, S. S. 1967. Two Pedigrees of Inbreeding from North India, *Man in India*, 47, 238–243.

Simpson, G. G. 1965. *The Meaning of Evolution*, Calcutta.

Slater, Eliot and Woodside, Moya, 1951. *Patterns of Marriage*, London.

Westermarck, E. 1936. *The future of marriage in Western Civilization*, London.

III

'*Intemperence in every enjoyment defeats its own purpose*'—T. R. Malthus

Population Problems

I, for one, am sick of hearing of population problems, policies and programmes. I find it in print in almost all technical and non-technical publications, on postage stamps, in post office cancellations, on the hoardings of railway stations and in various other forms. In spite of the Drugs and Magic Remedies (Objectionable Advertisement) Act 1954, quacks litter the Calcutta streets with handbills firmly pasted on electric lamp-posts. All mean birth control or the camouflaged unscientific term Family Planning. It is good that they are never read by poor peasants since they are not literate. Otherwise they would not have been hardy tillers of the soil to produce food for the white-collars of the city. West Bengal peasants are always short of labour during the sowing and the harvesting seasons and the tribal Santals are invited from the neighbouring areas to complete the work.

It was therefore a welcome relief to read Garret Hardin's Introduction to his beautiful collage, *Population, Evolution, Birth Control* (San Francisco, 1963). Let me quote him: 'More than a century and half ago, just shortly after the French Revolution, Thomas Robert Malthus published his essay on population, unleashing a storm of controversy which has continued unabated to this day. What's wrong? Why can't we solve 'population problem'? The reply, of course, is that there isn't any population problem; we conceive our trouble wrongly when we speak of it as a problem. The word problem suggests the word "question," and when we think of questions, we think of demands like this "What is 2+2?" Such demands are easily met. But the reticulum of trouble that we label 'population' is something else. As is often said in scientific research, our first problem is to find the problem. Failure to recognize this has contributed to the apparent immortality of the population problem. We have tried to answer questions when we should have been looking for them.' I will try to look for questions therefore. My answers may not satisfy all.

Question 1 : Is India overpopulated ?

Probably not—otherwise we would not have divided the country and admitted millions of refugees, mostly Hindus from Eastern Bengal and western Punjab. Further, with the annexation of Tibet by China, many Tibetans have taken refuge in India. Ceylon and Burma have also expelled many Indians who are now living here. If we had no space how could we allow so many immigrants? And of late several thousands of square miles of land have passed into enemy hands.

Then we have exterminated many villages and uprooted the sons of the soil therefrom for the sake of industries. I do not possess statistics for the whole of India but a few examples from West Bengal and Bihar will prove my contention. In West Bengal 10 villages were fully and 15 partially acquired for Chittaranjan Locomotive Workshop, Hindusthan Cable Factory and the Damodar Valley Projects. The total area of

the fully occupied villages is 9.1 sq. miles, while that of the partially affected ones is 8.8 sq. miles. The total population affected is 5426, all of whom could not be rehabilitated (Das and Banerjee 1962). The opening of the Haldia Port in Midnapur, West Bengal, has also costed more than a score of villages.

The Heavy Engineering Corporation, near Ranchi, Bihar has ousted about 25 villages having an area of about 14 square miles with a population of about 15,000 souls. Then there are many others in other States. Dam-sites have no less encroached upon villages and peoples. How could we do these if we were overpopulated and had 'no standing space,' in the language of some authorities ?

Then the density of population in India (1951 census) varies between 10 persons per sq. mile in the Andaman and Nicobar Islands to 1015 in Kerala, with an average of 281 for India. This density of population increased to 370 persons per square mile in 1961, which Maudlin (1967) calls 'very high' in comparison with a density of 'about 2000 persons per square mile of inhabited and cultivable land' for Egypt and an 'approaching density of 1000 persons per square mile' for Mauritius (Lorimer 1967).

In India there is still scope of reaching a uniform density of population since the average of 281 persons per sq. mile was not reached by no less than 20 out of 33 States.

Question 2 : Is India self-sufficient in food ?

Even this question cannot be clearly answered. We always hear of crop-estimates at the beginning of the season. I believe, all farmers are not compulsorily required to furnish reports of their actual produce of food-grains to any authority ; and unless this is known we will never know our actual position. It is true that we are importing food-grains from abroad, but a major part of it is spent in feeding industrial areas and even that inadequately as the quota of rations will prove. It is however often said that our food shortage is of very slender margin which could be bridged over with some effort on our part. We have not tried enough to increase food production

by improved methods of agriculture followed in the western countries or China or Japan. And we have wasted much of land for factories. Taking the examples of West Bengal and Bihar only, cited above, we have lost food produced by 35-50 villages and their food producers as well. And there was no alternative method to restore the food produced by the above villages. Even all the uprooted villagers have not yet been rehabilitated. They are a sort of internal refugees. Probably we thought of exporting machinery and buying food thereby, as is done in Japan. Then in our craze for road building we have dug deep, wide trenches for earth on either side of ill-made roads on agricultural lands. Neither agriculture nor fishery is possible in such places. There is no statistics for this loss of food, but it can be known. The poor peasants have never been compensated. On the other hand, these deep trenches have hampered agriculture in the nearby lands.

Then the amount of fallow land is still enormous. There has been public demand over the distribution of fallow lands to landless labourers. The latter were to receive land after the abolition of the zemindary system, but how many have got it ? As such, taking the various factors into account it may be said that we have never been really serious in our attempt to attain self-sufficiency in food for the whole of India.

Then we have built more cities in these few years. Cities are a prehistoric heritage. They are centres where food is is wasted and peoples with white-collar jobs are overfed. There is no specific hour of the day for food. Tea and snacks are taken at all hours of the day. Not to speak of vice and filth that accumulates with the establishment of a city, it is a phenomenon which the present civilization must abhor. Much can be said about the wasteful luxuries in cities, but this is not the proper place. The city, a prehistoric heritage, should be abandoned.

Question 3 : Is birth control the answer ?

I owe this question to Rev. Arthur MacCormack and Colin Clark (Hardin 1963). Many authorities have discussed it. There is no agreement between them. I would like to mention only a few points which occur to me as an anthropologist.

Firstly, all mothers at some stage of their lives realize the necessity of birth control. Popular beliefs also point out that both the old mother and the daughter or the daughter-in-law should not have children alongside. The old must stop. Then in almost all villages there are some quack midwives who are experts in annual removal of the embryo or the foetus. The old woman teaches the young girl all affairs of sex. This is also the case in Sweeden (Myrdal 1945) and probably in France as well. In France, birth control first began in the rural farms wherefrom it spread into the city. Mechanical birth control is an abnormal practice in the sense that it deprives the couple of the fullest enjoyment due to the presence of an extra artefact. Man has always attempted to heighten the sexual pleasure through various ways, and if that is negated by birth control it can never be popular. As such it must be left to the individuals themselves.

The Government of India has however vigorous birth control plans under the cover of Family Planning, and much of it has been due to our acceptance of foreign aid from the U. S. A. Hardin (1963) informs us as follows :

'In 1959, a President's Committee to study the U. S. Military Assistance Program, under the chairmanship of General William H. Draper, issued a report in which they pointed out in most delicate language—that foreign aid would have to be accompanied by birth control if the good effects of the aid were not to be nullified by excessive population growth. It was proposed that the United States furnish birth control information *on request*.'

President Eisenhower did not then agree, but in the fall of 1963, he had second thoughts on which Hardin remarks : 'As this book went to press, at the end of 1963, Congress was threatening to cut the Presidential request for foreign aid 40 per cent. How much was the thinking behind this action influenced by considerations of population and birth control ? It may be a long time before we know, because contraception is so politically sensitive an issue that the legislator whose vote is influenced by population theory may feel it would be political suicide to admit as much.'

But total birth control can probably solve overpopulation, but only a few want it (though it should be in some cases if family planning is meant in the strict sense of the term). The trend in the present literate families of Bengal cities is to have a few children, majority only one, or follow the advice of the Indian Government : 'Don't postpone the first, don't hurry up the second, and don't go in for the third,' but to have more servants. 'Baby in the nursery and Baby Austin in the garage' has been the ideal of many an elite. The mother does not like the responsibility of the child. In such cases the mother depends more upon aids of others than her own.

To have more servants has been the ideal of the day in Indian cities. If we want more servants we cannot have birth control for them. The position is nearly similar to that pointed out by Bertrand Russell. He says that in England Mrs. Margaret Sanger's pamphlet on birth control was declared obscene but not Mrs. Marie Stopes books. Russell remarks : 'The consequence is that, while it is permissible to teach birth control to the well-to-do, it is criminal to teach it to wage-earners and their wives' ; for that would lesson the number of men for menial jobs. Servants are again a curse of the city and of luxury. It is a pitiable waste of man-power particularly when they abound in hundreds, as can be seen in any Government office. Incidentally, are all of them actually necessary for the office ? Majority of them hail from villages and their return there would be useful.

To sum up this small review ; I feel that birth control should be left to individual choice, since, firstly there is no equivocal answer to our query ; secondly, its mass propaganda is useless because the mass is not as much educated as to decide whether it is good or bad for him (it is good if he can afford servants, it is bad if he cannot afford any) ; and thirdly, it is harmful for healthy sexual life, which is of immense value for social health. Erik Agduhr's (1942) researches on hormones indicate the effect of normal sexual functions in raising the resistance to a number of toxic agents, e. g., paratyphus culture, diptheria toxin in both the sexes. Normally reproducing couples are comparatively free from disease. If normal sexual

functions can heighten the resistance we may expect also the contrary, i.e. lowered resistance due to abnormal sexual functions.

Finally, I may be allowed here to quote a paragraph from Colin Clark's interview with Gandhi in November 1944. Clark writes : 'The greatest Indian of all time had no use for contraception. He opened the conversation with me in an unexpected manner'. "Do you know what is really the matter with the Indian people, Mr. Clark ?" he sked me. "No. Mahatma," I replied. "They are thoroughly idle—they won't work," he said. If Indians made the necessary effort, they could grow all the food they need ; *but without the stimulus of population pressure and economic need they will not make the effort.*"* Gandhi spoke on this subject with remarkable frankness. He considered that the efforts which Mr. Nehru was making at that time to ration food and to bring down prices were quite mistaken. "Only if food prices were higher" he said "would Indians work hard enough."

I have quoted the above to show the inherent idleness in us through the words of Gandhi. To me it appears to have increased all the more since 1947.

Let us digress a bit as to the world situation with reference to overpopulation and food resources. I again quote the Oxford economist, Collin Clark : 'Let us now really consider the questions of economics involved. It is a very sad thing that so many prominent scientific and literary men, accustomed always to testing all their evidence most strictly when working on their own subjects, are nevertheless content to rely on the wildest hearsay when making public statements on the subject of food and population. Once, in a controversy in the *Manchester Guardian*, I challenged Doctor A. V. Hill to re-examine the evidence on which some of his statements[1] about hunger and overpopulation were based and then to state whether he considered it satisfactory; but he did not reply. How many of those who parrot the phrase about two-thirds of the human race living in a state of hunger are aware that although it is true that it once appeared in an F. A. O. publication,

* Italics mine.

nevertheless it originated in nothing more than an arithmetical error on the part of a prominent propagandist, who confused two columns of statistical table[2]. It is true that the diets of a great many of our fellow-men may be inordinately dull, by our standards, but it is quite wrong to describe them as living in hunger.'

Even the last Director-General, F. A. O., used the above propaganda material very recently. Clark has rightly titled the sub-heading of the above quotation 'A question of morals or of economics ?' According to Clark the agricultural resources of the world are enough for ten times the present population of the world.

A very logical answer to my third question was long ago given by Raymond Pearl (1939) after an exhaustive review of 'The Effects upon Natural Fertility of Contraceptive Efforts.' I quote him *in extenso* :

'Is the obliteration of existing fertility differentials what those who people the earth want ? Or is a new pattern of fertility differentials, planned by the eugenists in their wisdom, what those who people the earth want, or merely what the eugenists want ? *Those who people the earth, and they alone, will in their own good time decide.** As far back as history goes men have never been lacking to allege that they knew what was best for humanity. But steadily and surely, if very slowly, the mass of humanity—those who people the earth have themselves decided, ever more and more, what they themselves thought they wanted, and have proceeded in ever increasing degree to get it. Their desires have often been foolish and

1. Professor Hill's actual words published in *Manchester Guardian* of November 17, 1965 were : 'Already more than two-thirds of the existing population have too little food for a healthy life, many are continually half-starved, many are in periodical danger of starvation.' (Hardin, p. 270).

2. The full, evidence for this extraordinary happending is set out in *The World's Food* (New York, 1954) by M. K. Bennett, Director of the Food Research Institute at Stanford and a recognized authority. Neither the writer in question nor F. A. O. have issued any reply to Dr. Bennett's criticism. (Hardin, p. 271).

* Italics mine.

sometimes plainly harmful, even to the extent of threatening the survival of the whole enterprise of human living. But such errors of judgement have not altered the dominant characteristic of human social evolution—the awkward, terribly slow and stupid, muddling, but steady progress of mankind in the mass towards the control of its own affairs. When fertility differentials change their patterns, as they may in the future, just as they have in the past, it will most likely be because the breeders—those who people the earth—decide that it will be to their personal advantage and self interest to alter their breeding habits, and not for any other reason.'

But I have another question which may be considered as subsidiary to question No. 3.

Question 3(a). Is the slogan of the Indian Government rightly said ?

The slogan is quoted on another page and need not be repeated here. It says firstly 'Don't postpone the first.' Postponing the birth of a child cannot have equal emphasis for all kinds of mothers. If the wife is above 30 years of age there is no question of postponing the child since she might not be still fertile. But irrespective of the age of the wife, an early child destroys marital happiness and in the case of young wives one must wait for at least 3-4 years. Wives below twenty years of age may also have the advantage of the adolescent sub-fertility interval and contraception may not be necessary.

The second part of the slogan, 'Don't hurry up the second' is well said. One must not hurry up in any work. But the point is, can we plan a biological event like conception ? Lewis Fanning (1949), who wrote the Family Limitation Section of the Royal Commission on Population of Great Britain, says that 'the majority of the unwanted children came from families where birth control was stated to be used. The percentage of women using control who had one or more unwanted children ranged from 27 per cent in the 1910-1919 marriage cohort to 21 per cent in 1930-34 marriage cohort whereas the corresponding percentage of women not using control varied from between 4 and 11 percent.'

Again, 'on the average, about 3 per cent of birth controllers definitely had families of smaller size than desired. They had abandoned control to have a child, without success. There is also a further 11 per cent, a considerable proportion of whom are likely to have desired larger families since, when questioned, they had used no control since the previous pregnancy.'

It is clear therefore that one cannot have a child according to his or her will. Conception is a complicated biological process and it cannot be always planned. Variability in the reproductive behaviour of women is caused by a host of factors, such as, irregularity of menstrual cycles due to age of women and seasons of the year. Pregnancies are possible without a menstruation during the lactational period and pregnant women may also menstruate thereby causing the sperfoetation of another foetus resulting in a twin pregnancy. The greater birth interval of the rural women when compared to urban ones is difficult to explain. Tulika Sen (1953) found a mean birth interval of 2.94 years for the rural Bagdi women in comparison 2.56—2.60 years among the high caste Bengali women of the city of Calcutta.* The joint enquiry by the W. H. O. and the Government of India found a birth interval of 3.5 years among the rural women of Ramanagaram, Mysore. It is a puzzle how could these rural women probably having no knowledge of birth control have a birth interval of 3—3.5 years. It is probable that cultural factors play a greater role than birth control.

The third part of the slogan is a complete denial of the child. If sterilization is not resorted to, there are chances of unwanted children among the birth controllers as well. But the greatest bar lies in the fact that the chances of death have not been taken into account. It is difficult to think that all parents, blessed with two children, will not lose any one or both of them. Then such a uniformity will be an easy prey to natural selection and mutation. Variation is an important factor in evolution.

* The difference between the means is statistically significant.

Compared to the above slogan, I beg to offer the following three rules, which if adhered to, might be of biological and social value :

1. Marry early ; avoid having a child within 3-4 years of marriage.

Note : Take advantage of adolescent sub-fertility.

2. Try to avoid having a child within 2-3 years of the previous child.

Note : Fertility wanes with age.

3. Avoid having children after 30-32 years of the wife's age.

Note : Multiple births, monsters, mongolian idiots, are largely born at the high ages of the mother.

Let me conclude this part with a quotation from Raymond Pearl again : 'But the essence of the matter, for students of population at the present time, is the physical impossibility of the indefinitely continuous and synchronous growth of both population and altruistic behaviour in a spatially limited universe.'

Checks on Population Growth

The checks on population growth are known as Malthusian checks or Neomalthusianism. On this fact Garett Hardin writes : 'Malthus was adamant in insisting that sexual behaviour within marriage must not be impeded by unnatural devices. * * * It is rather curious, therefore, that birth control movement arising in the nineteenth century should have been called 'neomalthusianism' an identification that must surely have made Malthus turn in his grave.'

But the man who first suggested checks on the growth of population was Verhulst, who discovered in 1838 the familiar S-shaped curve, known as Logistic curve. Verhulst and his Logistic curve were forgotten until the rediscovery of the latter by Raymond Pearl and L. J. Reed in 1920. Verhulst however suggested that the checks on the growth of a population increase in proportion to the population itself. Quetlet,

Verhulst's teacher, 'assumed by analogy with the resistance of a medium to the passage of a projectile, that the resistance to the growth of a population increases in proportion to the square of the velocity with which the population tends to increase.' This means that the greater the rate of growth of a population the greater will be the resistance offered to its growth. I am not aware of any earlier study in which systematic attempts have been made to study these checks on population growth although many such checks as, widow remarriage, infant mortality, complete sterility, war, epidemic, etc., are known. I will try therefore to offer here a discussion of such population checks, which, first of all, may broadly be divided under three categories : (a) biological, (b) sociological and (c) psychological.

The factors under the psychological category have obtained the least attention while those under the sociological one have of late been recognized. The position of the biological factors appears to be intermediate between the two.

(a) Biological :

1. *Infant mortality :* Regional, secular or innate biological variations in infant mortality and its variation at the different age-groups bring about first of all a swing in sex ratio at the different age-groups. Unfortunately in West Bengal in almost all age-groups among the three Hindu upper castes there is a preponderance of males over females. This is not a healthy sign for a growing population. The Census Commissioner, 1931, noted a steady fall in sex ratio since 1901 for the whole of India. He also wrote that 'the number of females is adequate to the number of males is limited to the ages from 15 to 30.' But this is not borne out from the following tables, which show higher number of males than females at all age-groups among the three Hindu upper castes.

TABLE 1

Civil Status and Age Groups of Three Bengali Castes (After Census of India, 1931)

Castes	Age group in years	Unmarried Male	Unmarried Female	Married Male	Married Female	Widowed Male	Widowed Female	Sex Ratio (3) Male	Sex Ratio (3) Female
Brahman	0–13	242380	209585	8430	26887	879	1096		
	14–43	189892	16474	255032	246969	14710	61914	54.1	45.1
	44+	3535	879	99607	83665	24448	70198	Diff = 8.2±.0004	
Kayastha	0–13	266635	237662	9888	22202	666	1059		
	14–43	152849	16563	239356	276125	13063	67319	52.6	47.4
	44+	2914	640	113591	37536	20990	79434	Diff = 5.2±.0004	
Vaidya	0–13	19066	18928	772	1162	24	62		
	14–43	12367	3629	14822	17592	888	3981	52.0	48.0
	44+	230	61	7977	3361	1481	4936	Diff = 4.0±.0014	
			Males		Females			West Bengal (151)	
West Bengal (1951)	15–24		241,871		214,006			53.8	46.2
	25–34		224,625		168,229			Diff = 7.6±.0001	
	35–44		161,074		115,252				

TABLE 2

Details of the Unmarried Reproductive Age Group (14–43 years) (after Census of India 1931)

Age groups in years	Brahman Male	Brahman Female	Kayastha Male	Kayastha Female	Vaidya Male	Vaidya Female
14–16	44397	10439	47254	10961	4063	2364
17–23	65016	3877	72515	3660	5651	908
24–43	80479	2158	33080	1942	2653	357
Total	189892	16474	152849	16563	12367	3629

How far this is due to the mortality of the females at the different age-groups is unknown, but obviously modern medicine has not been able to reverse the sex ratio. It might be pointed out here that although modern medicine has reduced mortality of tuberculosis, its morbidity has increased, which according to Bottiger, Nordenstam and Wester (1962) may even increase. Tuberculosis has been dangerously recessive in many families and many authorities have sounded warning about its gradual increase with industrialization.

2. *Natural checks on fertility of women :* Natural factors affecting female fertility have been the subject of a few studies. Goodhart (1956) has given a list of such factors of natural forces selecting fertility.

It is worth quoting him : 'In man, multiple births are rare, women are fecund for only about half their lives, conception may be inhibited during lactation and more or less complete sterility is surprisingly common. These checks on fertility must be the result of natural selection, for if there had been any real overall selective advantage in higher fecundity it could have been evolved. Women are well adapted anatomically for nursing twins, and the tendency to have them is certainly inherited so that their comparative rarity must mean that, owing probably to higher mortality, there can be no real selective advantage in multiple births, even though, potentially they could increase fertility.' Hardin (1964) also maintains the influence of natural selection in increasing the irregularity of human ovulation. In a recent survey by Jaya Choudhuri among high caste urban girls it was found that urban girls have more irregular menstrual cycles than their rural counterpart (unpublished).

3. (*a*) *Differential fertility* : It has been often claimed that the poorer classes have a higher fertility than the rich. The Census of India, 1931, found a higher average number of children (4.4) per family for the producers of raw materials, while an average of 3.7 for those practising law, medicine and instruction. Kingsley Davis (1951) has also worked out

detailed fertility differentials for different categories of populations from cities and rural areas. Chandrasekharan and George (1962) found marked fertility differentials in three areas of West Bengal, two of which, Ballygunge and Beniatola, were from the city of Calcutta and the third area was from rural Singur in the district of Hooghly. The average number of children per married women aged 45-49 years is 5.7 in Ballygunge, 6.2 in Beniatola and 7.3 in Singur. They are of opinion that the differentials have existed for at least two decades and are due to limitation of pregnancies. The study reveals that fertility has begun to fall long before the present expansion of family planning programmes. Raymond Pearl showed after a detailed study of the American Whites and Negroes that there is no significant difference in innate fertility of the two groups and the differences in fertility were environmental in nature. Criminal abortion, postponement of marriage, involuntary sterility (5.3% ; Lorimer 1958)* and contraception are the main causes of differential fertility. Pearl (1939) has described eight different variables of fertility and each of these variables is dependent upon a large number of cultural factors, like habits, folkways, religion, education, economic status, etc.

(*b*) *Sociological*: Frank Lorimer's (1958) study on *Culture and Fertility* has opened a new line of study of the different fertility checks. Culture was so long considered to be irrelevant to fertility, but Lorimer has shown how it is limited in some societies, how some cultures are ambivalent towards it, while how some tend to promote it at a very high level. Its complications due to psychological factors, its variations in the major kinship groups and lastly its variations in the different religions have also been discussed by Lorimer.

In West Bengal, the greatest check in the increase of population, at least among the three upper Hindu castes, has been due to the prohibition of widow remarriage.

Increase of the average age at marriage to 24-25 years in

* Weighted average of 3 Bengali Hindu groups.

the case of high caste Hindu girls is another factor which, according to Lorimer, causes a reduction in fertility level by 25%. Earlier marriage is a desideratum for such girls. Here again is a great problem for the proposed National Commission on Marriage.

(*c*) *Psychological factors :* Complications due to psychological factors have already been mentioned. In all societies some males are known to show an aversion towards marriage. Goodhart (1956) considers them 'psychologically infecund'. He also states : 'Such infecundity is generally and it is therefore likely to be at least partly conditioned by inherited congenital factors.' This may to some extent be proved from the following pedigree, a large part of which was published elsewhere (Sarkar 1941).

PEDIGREE SHOWING UNMARRIEDS IN TWO GENERATIONS.

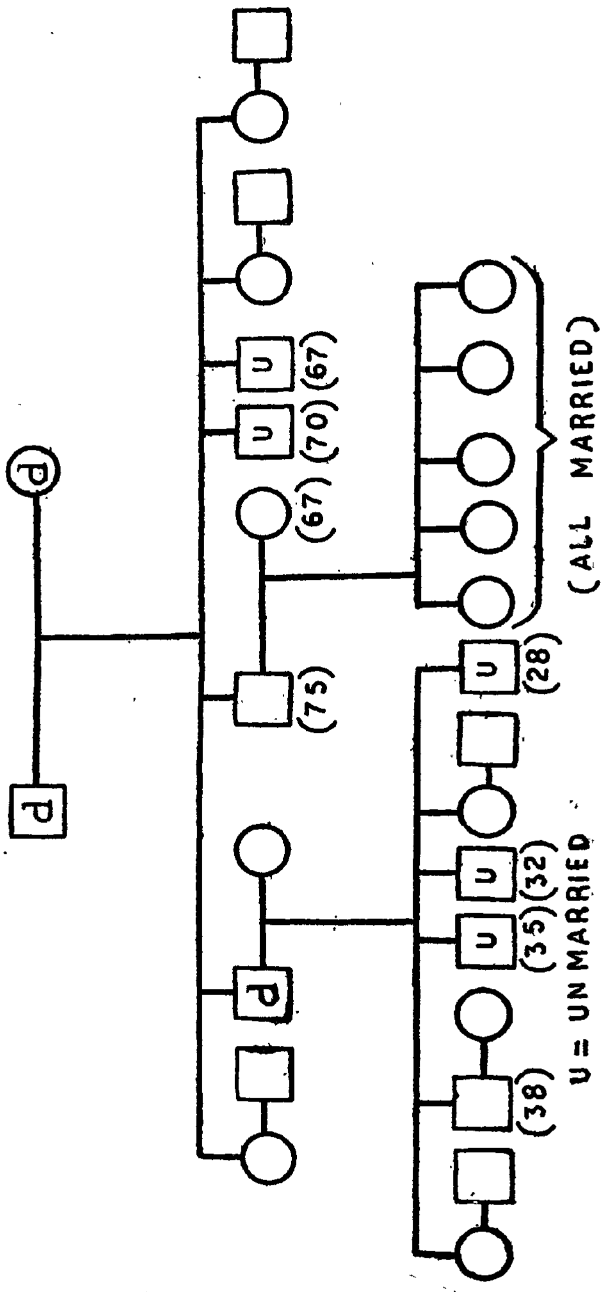

FIG. 10

Asceticism among the Hindus has caused a large number of males remaining celibate. A study of the monks of the various religious organizations like the Ramakrishna Mission, Bharat Sevasram Sangha, Gaudiya Math, etc. will reveal not only the actual frequency of such celibates but also the extent of the psychological infecundity. Stycos (Hardin 1963) in a valuable study has also discussed certain psychological factors such as, *Dominance of Feminism*, *Indifference*, *Ambivalence*, etc. which our Indian planners should seriously note along with his references to the speeches of Nehru and Radhakrishnan on family planning.

The Problem

I have tried to show that there is no population problem over which there has been so much hue and cry. Much of it is politically designed. But I never mean that we have no problem. We should have as early as possible a National Commission on Marriage, which must take up the marriage problems of the country. The three urban upper castes of Bengal, among whom the average age at marriage of girls will be about 25 years require immediate attention of our leaders and the parents of the prospective husbands as well. We are all swept away by the mere rate of increase of 2% per annum, but this is not true of all populations. The best example is that of the Parsis of India so thoroughly studied by Chandrasekharan (1948). Nature cannot be so uniform as to be governed by 2% per annum only. Population forecasts are not always reliable. The U. S. A. population of today should have been that of 1985 and that was the forecast of the rediscoverer of the Logistic curve. And that has not thrown the U. S. A. out of gear. On the other hand, they must be enjoying the population pressure and attempting to channelize the surplus growth—if it could really be said so. If it helps the nation, it must also help the family. Stycos is right in saying : 'A large population......is probably a necessary condition of power. Giant armies and industries both require large population bases, and the total national product of a nation is greatly influenced by the sheer weight of numbers.' The power

sense is equally applicable in peasant and poorer families. 'The population crisis is only the external aspect of what is really a crisis in the family as an institution' (Myrdal 1945). In the words of Mahatma Gandhi, let us have the 'stimulus' of population pressure. And let there be no politics in regard to questions of population.

REFERENCES

Bottiger, L. E., Nordenstam, H. H., and Wester, P. O. 1962. Disseminated Tuberculosis as a cause of fever of obscure origin, *Lancet*, 6 January, 19.

Chandrasekharan, C. and George, M. V. 1962. Mechanisms underlying the differences in Fertility patterns of Bengalee Women from three Socio-economic Groups, *Milbank Mem. Fund Quart.*, XL, 59–89.

Chandrasekharan, C. 1948. Some Aspects of Parsi Demography, *Hum. Biol.* 20.

Das, A. K. and Banerjee, S. K. 1962. Impact of Industrialization on the Life of the Tribals of West Bengal. *Bull. Cul. Res. Inst.*, Special Series No. 1.

Davis, Kingsley, 1951. *Population of India and Pakistan.*

Goodhart, C. B. 1966. World Population Growth and its Regulation by Natural Means, *Nature*, 178, 561–565.

Hardin, Garett, 1963. *Population, Evolution, Birth Control*, San Francisco.

———— 1964. Ultimate Failure of Rhythm, *Science*, 143, 995.

Lorimer, F. 1958. *Culture and Human Fertility*, Unesco, Paris.

Lorimer, F. 1967. The Population of Africa. In *The Population of the World*, Madras.

Mauldin, W. P. 1967. The Population of India. In *The Population of the World*, Madras.

Pearl, Raymond, 1939. *The Natural History of Population, London.*

S. S. Sarkar, 1941. *Aims and Objects of Eugenic Researches in India*, Calcutta.

ANTHROPOMETRY AMONG THE PEOPLES OF MIDNAPUR, WEST BENGAL

PAPIA BANERJEE

(*Received on 11 November 1968*)

Abstract : An attempt has been made in the present study to utilize the two cranial collections from Contai, Midnapur, West Bengal, and the somatic measurements of the peoples of the same area to find out the physical type of the peoples of the above mentioned area. Furthermore the living measurements of the present investigation have been compared with those of Risley (1891) and Majumdar (1958) collected from Midnapur.

SINCE the publication of Myers (1905) the utilization of measurements from the living subjects as well as from the skeletal remains of the same population has been recognized as one of the best approach for the understanding of ethnic bearing of a particular population. In that approach somatometry, craniometry and osteometry come to aid each other in the solution of a common problem. In India such an attempt appears to be rare although Charles (1893) attempted a comparision of the living and the skeletal measurements among the Churas of the Punjab ; the living data utilized were those of Risley (1891).

In consideration of the above-mentioned facts an attempt has been made by the present writer to utilize the two cranial collections from Contai, Midnapur and the somatic measurements of peoples of the same area to find out the physical type of the peoples of the above mentioned area.

Material and Method

The two collections of skulls, the first one being the victim of a cyclonic storm of 1942 (Bhattacharjee 1957) while the second one collected during October, 1959 from the local

The author is Pool Officer, CSIR and is attached to the Department of Anthropology, University of Calcutta, Calcutta – 19,

cemetery of Khargachandi situated at the outskirts of Contai town, were utilized for the present purpose. During the time of second collection and also in the previous winter (1958) an anthropometric survey was undertaken round the area wherefrom the cranial material was collected.

The total number of individuals measured for the present investigation comprised 504 adults (male, 272; female, 232) while cranial material comprised 68 adult males and 40 adult females. Measurements were taken according to the standard anthropometric technique (Martin 1928). During the later survey (1959) mentioned above the auricular height measurement was repeated with the help of Schultz's Parallelometer which was not available during the survey of 1958. This measurement was repeated when the same person was available. The rest of the data on auricular height were collected anew along with head length and head breadth measurements. This has caused an increase of the cephalic data over other measurements (Table 1).

Furthermore the living measurements of the present investigation were compared with those of Risley (1891) and Majumdar (1958) collected from Midnapur, West Bengal. The two sets of data thus comprised 41 individuals from Risley (1891) and 97 individuals (excluding Mahato and Muslims) from Majumdar (1958). For the sake of brevity the three samples have been abbreviated as follows: Risley's male sample—R; Majumdar's male sample—M; the present male sample C/M and the female sample—C/F.

The statistical constants of the living measurements and indices of Contai males and females have been presented in the Table 1 while mean values of R, M and C/M along with the values of 't' in between the three sets of data have been presented in the Table 2. As the cephalic and cranial linear measurements are not comparable to each other due to the presence of soft tissues and skin on the former, only the percentage occurrences of indices have been considered in the present study. The correlative study on cephalic and cranial linear measurements of the same population have already been reported (Banerjee 1968).

TABLE 1

Statistical constants of measurements and indices of Contai males and females.

Character	No.	Range	Mean ± S. E.	S. D.	C. V.
		Male			
Weight	248	80 – 160	105.75±0.84	13.30	12.58
Stature	215	1470 – 1798	1634.90±4.27	62.70	3.84
Head length	272	162 – 202	183.04±0.44	7.26	3.97
Head breadth	272	125 – 159	143.16±0.34	5.61	3.92
Head height	104	111 – 137	124.07±0.47	4.77	3.84
Horz. circm. of head	154	490 – 572	532.22±1.26	15.60	2.93
Min. frontal breadth	215	91 – 120	102.41±0.35	5.14	5.02
Bizygomatic breadth	215	119 – 158	131.67±0.36	5.31	4.03
Total facial height	213	100 – 130	113.92±0.41	5.92	5.20
Upper facial height	213	53 – 83	66.52±0.29	4.26	6.40
Nasal height	215	41 – 61	50.36±0.24	3.56	7.07
Nasal breadth	215	28 – 45	35.35±0.20	2.90	8.20
Length-breadth index	272	69.16 – 91.98	78.27±0.25	4.12	5.26
Length-height index	104	58.58 – 75.89	67.47±0.32	3.22	4.77
Breadth-height index	104	77.97 – 97.66	87.14±0.37	3.75	4.30
Jugo-frontal index	215	69.62 – 92.31	77.79±0.20	2.90	3.73
Transverse fronto-parietal index	215	62.67 – 85.71	71.49±0.22	3.28	4.59
Total facial index	213	74.83 – 99.21	87.53±0.33	4.76	5.44
Upper facial index	213	41.41 – 64.29	50.59±0.24	3.52	6.96
Nasal index	215	52.46 – 93.18	70.38±0.49	7.23	10.27
		Female			
Weight	184	64 – 160	90.50±1.11	15.00	16.57
Stature	190	1335 – 1667	1489.00±4.31	59.40	3.99
Head length	232	153 – 194	173.58±0.42	6.36	3.66
Head breadth	232	121 – 153	137.29±0.40	6.12	4.46

Character	Female				
	No.	Range	Mean+S. E.	S. D.	C. V.
Head height	102	107– 132	117.85±0.42	4.20	3.56
Min. frontal breadth	190	89– 110	99.78±0.31	4.26	4.27
Bizygomatic breadth	190	108– 136	124.17±0.35	4.86	3.91
Total facial height	189	94– 121	106.42±0.40	5.52	5.09
Upper facial height	189	49– 73	61.10±0.34	4.66	7.63
Nasal height	190	39– 58	46.82±0.24	3.26	6.96
Nasal breadth index	190	27– 39	32 56±0.16	2.24	6.88
Length-breadth index	232	69.49–91.02	79.09±0.27	4.18	5.28
Length-height index	102	60.11–75.15	68.41±0.30	3.00	4.39
Breadth-height index	102	79.02–96.12	87.15±0.37	3.74	4.29
Jugo-frontal index	190	74.02–90.18	80.41±0.22	2.98	3.71
Transverse fronto-parietal index	190	64.67–80.00	72.31±0.20	2.82	3.90
Total facial index	189	74.26–96.61	85.75±0.33	4.54	5.29
Upper facial index	189	39.55–60.00	49.13±0 29	3.96	8.06
Nasal index	190	56.86–88.64	69.81±0.47	6.42	9.20

TABLE 2

Values of 't' between R, M and C/M along with the mean values.

Character	Mean±S. E.			Values of 't'		
	R	M	C/M	R & C/M	M & C/M	R & M
Weight	105.92±1.66	104.70±1.44	105.75±0.84	0.09	0.06	0.55
Stature	1625.10±8.07	1655.20±6.82	1634.90±4.27	1.01	2.52	2.78
Head length	181.58±1.14	185.38±0.69	183.04±0.44	1.19	2.85	2.85
Head breadth	141.48±0.71	137.70±0.56	143.16±0.34	2.13	8.40	4.20
Min. frontal breadth	102.30±0.61	101.76±0.40	102.44±0.35	0.20	1.28	0.74
Bizygomatic breadth	128.84±0.81	129.39±0.50	131.67±0.36	3.21	3.74	0.57

Character	Mean+S. E.			Values of 't'		
	R	M	C/M	R & C/M	M & C/M	R & M
Total facial height	–	107.46±0.66	113.92±0.41	–	8 39	–
Upper facial height	–	58.94±0.51	66.52±0.29	–	13.06	–
Nasal height	48.28±0.54	47.68±0.41	50.36±0.24	3.52	5.70	0 88
Nasal breadth	36.62±0.47	36.28±0.26	35.35±0.20	2.49	2.90	0.63
Indices						
Length-breadth	77.85±0.58	74.33±0.41	78.27±0.25	0.67	8.21	4.95
Jugo-frontal	79.39±0.53	78.27±0.22	77.79±0.20	2.86	1.60	1 96
Total facial	–	83.22±0.53	87.53±0.33	–	7.06	–
Upper facial	–	45.41±0.41	50.59±0.24	–	11.02	–
Nasal	76.85±1.44	76.40±0.74	70.38±0.49	4.25	6.84	0.28

Result and Discussion

Weight

It will be apparent from the Table 2 that weight of the peoples of Midnapur has not changed, almost at all, since Risley's time and this is confirmed by the mean values of M and C/M. No significant difference has been found between the mean weight found by Risley and the mean of Majumdar as well as the mean of the present sample.

Stature

In respect of stature M shows the highest mean of the three male samples compared here and differs significantly from R and C/M. The difference between the latter two samples (R & C/M) is not statistically significant. The percentage occurrences of different forms of stature have been presented in Table 3 and it will be seen therefrom that short to below medium stature occurs in the highest frequency among the peoples of Midnapur.

TABLE 3

Percentage occurrence of stature.

Character	R	M	C/M	C/F
Very short	2.4	4.1	2.3	5.8
Short	24.4	30.9	26.5	44.2
Below medium	39.0	24.7	25.6	24.2
Medium	19.5	10.3	17.7	15.8
Above medium	2.4	14.4	15.8	4.7
Tall	12.2	14.4	12.1	5.3
Very tall	–	1.0	–	–

Head form

In head length M shows the highest mean and differs significantly from R and C/M while the latter two do not differ significantly. The above agreement between R and C/M is also borne out by the mean values of head breadth. In head breadth M shows the lowest mean value and the differences between M and R and between M and C/M are highly significant while the difference between R and C/M is on the border line of significance.

The measurement on head height appears to be very variable due to the difference in the technique of measurement and as such it has not been compared here. The horizontal circumference of head was not measured by the other two authors. Contai females were also not measured for horizontal circumference of head due to their thick long hair.

In length-breadth index there is a close similarity between R and C/M while M shows the lowest mean and differ significantly from the former two. The differences in the mean values are also reflected in the percentage occurrences of the different head forms (Table 4). In this respect cranial data also show a different picture from M and stand in close agreement with R and C/M.

TABLE 4

Percentage occurrence of length-breadth index.

Character	R	M	C/M		C/F	
			Living	Skull	Living	Skull
Hyperdolichocephaly		15.5	2.6	10.2	1.3	2.9
Dolichocephaly	34.2	51.6	29.0	33.9	23.3	11.8
Mesocephaly	46.3	26.8	42.7	39.0	44.4	64.7
Brachycephaly	17.1	5.1	21.0	15.3	23.7	14.7
Hyperbrachycephaly	2.4	1.0	4.8	1.7	7.3	5.9

Head form of the Contai males and females, both living and skull, and also that of R appears to be mainly mesocephalic while M shows mainly the delichocephalic form.

In length-height index and breadth-height index Contai males and females, both living and skull, show mainly hypsicephalic (Table 5) and acrocephalic (Table 6) forms respectively.

TABLE 5

Percentage occurrence of length-height index.

Character	C/M		C/F	
	Living	Skull	Living	Skull
Chamaecephaly	—	1.7	—	—
Orthocephaly	5.8	8.5	5.5	8.8
Hypsicephaly	94.2	89.8	94.5	91.2

TABLE 6

Percentage accurreuce of breadth-heigth index.

	C/M		C/F	
	Living	Skull	Living	Skull
Tapeinocephaly	1.0	1.7	—	2.9
Metriocephaly	27.9	27.1	31.4	41.2
Acrocephaly	71.1	71.2	68.6	55.9

Facial form

C/M differs from M significantly in total facial height and upper facial height and also in the two facial indices. The differences in the mean values of upper facial index and total facial index are also reflected in the percentage occurrences of different facial forms (Tables 7 & 8).

TABLE 7

Percentage occurrence of total facial index

Character	M	C/M	C/F
Hypereuryprosopic	17.5	1.9	6.4
Euryprosopic	37.1	21.1	30,7
Mesoprosopic	24.7	32.4	33.3
Leptoprosopic	19.6	24.9	20.6
Hyperleptoprosopic	1.0	19.7	9.0

In total facial form C/M and C/F show mainly mesoprosopic form while M shows mainly euryprosopic type.

TABLE 8

Percentage occurrence of upper facial index.

Character	M	C/M		C/F	
		Living	Skull	Living	Skull
Hypereuryene	25.8	1.4	3.7	4.2	3.3
Euryene	46.4	19.3	29.6	35.5	16.7
Mesene	26.8	59.2	61.1	44.4	60.0
Leptene	1.0	16.0	5.6	11.6	20.0
Hyperleptene	-	4.2	-	4.2	-

In upper facial index Contai males and females, both living and skull, show mesene form of face in the highest frequency while M shows euryene face in the highest frequency.

Risley however did not take the above two facial measurements.

The mean values of minimum frontal breadth of R and C/M are very close to one another while M shows the lowest value, the differences however are not statistically significant.

Nasal form

The significant difference in nasal height between R and C/M may be due to the use of a different landmark for nasion (sellion) by Risley. In nasal breadth and nasal index C/M shows the lowest mean and differs signiffcantly from R and M.

In nasal form all the three living groups are however appear to be mainly mesorrhine (Table 9) while male and female crania show chamaerrhine in the highest frequencies. It has already been shown by Charles (1894) and Schultz (1918) and others that the nasal measurements are not comparable in the living and skull, and as such these have not been compared here.

TABLE 9

Percentage occurrence of nasal index.

Character	R	M	C/M	C/F
Leptorrhine	22.0	18.6	46.3	50.5
Mesorrhine	65.9	71.1	51.4	47.9
Chamaerrhine	7.3	10.8	2.3	1.6
Hyperchamerrhine	4.9	–	–	–

It will be apparent from the above presentation that when compared with Risley's and Majumdar's samples, Contai males appear to be closer to Risley's mean values than those of

Majumdar in the majority of characters. Majumdar's mean values appear to be extreme in nature. In stature and head length Majumdar's means are the highest of the three samples compared here while in head breadth, minimum frontal breadth and nasal height Majumdar's means appear to be the lowest of all. In bizygomatic breadth and nasal breadth the mean values of Majumdar's sample however occupy an intermediate position. It has already been pointed out (Banerjee 1960) that the measurements of head which are known to vary lesser than the other characters, show the largest variation particularly when Majumdar's sample is taken into account. In the present study in head length M shows the highest mean but in the case of head breadth the lowest one and these two measurements of Majumdar's sample differ significantly from those of R and C/M.

Compared with it, the constancy of weight in the three samples is rather surprising. M shows the lowest mean weight of 104.70 lbs. compared to 105.92 lbs. (converted from gram) of R and 105.75 lbs. of C/M.

It is worth while pointing out that in head shape Risley's sample, Contai males and females, both living and skull, appears to be similar to each other while Majumdar's sample stands wide apart in this respect. In facial form also Majumdar's sample shows a different picture than C/M and C/F, both living and skull.

Summing up, it has been found that peoples of Midnapur are mainly short to medium in stature. Head form is mainly mesoprosopic, hypsicephalic and acrocephalic. Cranial data of the present study also agree well in this respect. In facial form, they appear to be mainly mesoprosopic and mesene. In the latter character (upper facial form) cranial data also appear to give an additional support to the above finding. In nasal form the living population appear to be mainly mesorrhine while in cranial data chamaerrhine appear to be predominant type.

Thanks are due to Dr. S. S. Sarkar for his kind advice for the work.

REFERENCES

Banerjee, P. 1960 : A comparative study of the Oraon physical characters. *Bull. Dept. Anthro. Govt. Ind.* 9 : 89–100.

——— 1968 : Cephalic and cranial correlations. *Man in India.* 48 : 264–274.

Bhattacharjee, P. 1957 : Cranial capacity of Bengalee Skulls. *Man in India,* 37.

Charles, H. 1893 : Contributions to the craniology and craniometry of the Panjab tribes. *J. Anat. and Physiol.* 27 : 5.

Majumdar, D. N. and Rao, C. R. 1958 : Bengal anthropometry survey, 1945. A statistical study. *Shankhya,* 19 pt. 3 and 4

Martin, R. 1928 : Lehrbuch der Anthropologie. Ban. 1. *Jena.*

Myers, S. 1905 : Contributions to Egyptian Anthropometry II. The comparative anthropometry of most and modern inhabitants. *J. Roy. Anth. Inst.,* 35 : 80–91.

Risley, H. H. 1891 : Tribes and castes of Bengal. Data. Vol. 1. *Calcutta.*

Schultz, A. H. 1918 : Relation of the external nose to the bonny nose and nasal cartilage in Whites and Negroes. *Am. J. Phy. Anth.,* 1 : 329–338.

ABO BLOOD GROUP FREQUENCIES OF INDIA, PAKISTAN AND THE ADJOINING AREAS AS A WHOLE

ALOKE KUMAR GHOSH

Abstract: *Following McArthur and Penrose's world average for ABO-blood groups, an average for India, Pakistan, Ceylon, Nepal and Maldive Islands has been calculated on the basis of almost all data published up to 1965. The data have been divided into two groups, Australoids and the 'Rest'. The data have been tested for Penrose's formula for genetic distance.*

THE present study is an attempt to find out an average for ABO blood groups for India, Pakistan, Bhutan, Nepal, Ceylon and the Maldive Islands as a whole. McArthur and Penrose (1949) calculated average world frequencies of the ABO blood group genes, in which all the gene frequencies of the different countries of the world were taken into consideration. For the average gene frequencies for India, Bhutan, Ceylon, Maldive Islands, Nepal and Pakistan, they were able to utilize ABO blood groups data upto 1949. Since 1949 a considerable amount of work on ABO blood groups has been done in India and the adjoining countries. As such in the present study all data upto 1965 have been collected together to find out the average ABO gene frequencies as a whole for the above contiguous geographical area. All published data on ABO blood groups have been taken into account, though a few samples might have escaped our attention. The utility of such an average, not only for blood groups, but also for all anthropometric characters, lies in the rating of any population, as shown by Penrose (1955). According to him, "Any population can be rated according to its divergences from these standard frequencies by summing the squares of the differences between standard values and those in the specific population."

The author is attached to the Department of Anthropology, University of Calcutta, 35 Bellygunge Circular Road, Calcutta—19.

Method

All published ABO blood group data of the above-mentioned countries have been collected. Some of the data have been excluded for doubtful percentile frequencies. In some cases absolute numbers were not available, and they were calculated from the given percentile frequencies. Then the whole data for the above mentioned countries were pooled together, and the percentages of O, A, B and AB calculated. Gene frequencies were estimated according to Bernstein's improved formulae.

Table 1 shows the absolute numbers of the four blood groups, their percentages and gene frequencies for India, Bhutan, Ceylon, the Maldive Islands, Nepal, and Pakistan. D/σ is 6 and Chi^2 is 6.3218, which indicate that the probability is less than 2% for 1 D. F. The pooled data are thus heterogeneous in nature. This is expected since peoples of various ethnic strains and mating groups have been pooled together. The two series of Table 1 express a good deal of similarity between them. But compared with world frequencies (McArthur and Penrose 1949) the average q (.226) for the above five countries is much greater than the world average of .162, while the values of p (.184) and r (.591) are less in the former than the world averages of .215 and .623 respectively. The Australoid populations of India have been pooled together and separately shown. Its values of p, q and t .206, .175 and .611 respectively. Compared with the Rest (Table 1) it is seen that p and r are greater but q is lesser among Australoids than those in the 'Rest.' The Australoid sample is also highly heterogeneous ($chi^2 = 14.7385$) while that of the Rest shows considerable homogeneity. This statistical homogeneity is not, however, borne out by anthropological studies. The genetical distance (D^2) calculated according to Penrose (1966), in respect of this character, between the world average and the average of the present study is .006144. Between the Australoid and the Rest it is .004281. The D^2 values show that the genetic distance between the world frequencies and those of the present study is greater than that between the Australoid and the Rest.

TABLE 1

ABO Blood and their frequencies

Author	Population	Total	O	A	B	AB	p	q	r	x^2
	Australoids	5347	2004	1645	1374	324	0.2060	0.1747	0 6193	14.7885
Present Study	Rest	134588	46664	83575	43293	11056	0.1825	0.2280	0.5895	2.8588
	Inda, Bhutan, Ceylon, Maldive Islands, Nepal and Pakistan	139935	48668	35220	44667	11380	0.1834	0.2258	0.5908	6.3218
McArthur and Penrose	India, Bhutan, Ceylon, Maldive Islands and Pakistan		34.78%	25.17%	31.92%	8.13%	0. 185	0. 230	0. 585	
do	World Average						0. 215	0. 162	0. 623	

REFERENCES

Basu, A., Sarkar, J., Roy, B., Dasgupta, P., Sanyal, A., and Sarkar, S. S. (1966). Anthropo genetic investigation in the Dalma and the Ajodhya Hills and their neighbourhood. *Sci. and Cult.*, 32, 273 – 275.

Bhattacharjee, P. ('957). A genetic survey in the Rarhi Brahmins and Muslims of West Bengal : $A_1 - A_2 - B - O$, M – N, Rh-blood groups, ABH secretion, sickle-cell, P. T. C. taste, Midphalangeal hair and colour blindness. *Bull. Dept. Anth.*, V, 18 – 28.

Bird, G. W. G., Elizabeth, W. Ikin, Mourant, A. E. and Lehmann, H. (1962). The Blood groups and Haemoglobin of the Malayalis. 'Indian Anthropology' edited by T. N. Madan and G. Saran, Bombay, 221 – 226.

Bird, G. W. G., Krishnaswami, P. and Menan, K. K. (1964). $A_1 - A_2 - BO$ blood groups of Marathas (Kshtriyas). *Man*, 64 : 19.

Biswas, K. C. (1955). Blood groups from Cooch-Behar. *Sci. and Cult.* 21 : 256.

Boyd, W. C. (1939). Blood groups. *Tabul. Biol.*, 17 : 113 – 240.

Chakravortty, M. (1965). A note on ABO blood groups of the Thadou Kuki of Nagaland. *Sci. and Cult.* 31 : 264.

Chakravortty, M. (1965). ABO blood groups of the Zeliang Nagas. *Man in India.* 45 : 311 – 315.

Das, B. M., Agarwal, K. K., Gupta, P., Banerjee A., Bose, A., and Mukherjee, B. (1953). Blood groups from Calcutta. *Sci. and Cult.* 19 : 164.

Das, S. R. and Sastry, D. B. (1960). Simplified maximum likelihood estimation of the A – B – O gene frequencies : Results for a few Indian peoples surveyed. *Bull Anth. Surv. India.* IX : 1 – 8.

Das, S. R., Kumar, N., Bhattacharjee, P. N. and Sastry, D. B. (1961). Blood groups (ABO, MN and Rh), ABH secretion, sickle-cell, P. T. C. taste and colour-blindness in the Mahar of Nagpur. J. Roy. Anth Inst 91, 2 : 345 – 355.

Dronamraju, K. R., Meera Khan, P. and Narayana Murty, V. V. (196). ABO blood groups of the Andhras, *Man*, 62 : 71.

Ghosh, A. K. (1964). ABO blood groups from Singhbhum, Bihar, *Sci. and Cult.*, 30 : 49 – 50.

Ghosh, A. K. (1962). ABO blood groups of Santal (unpublished).

Ghosh, L. (1962). ABO, MN blood groups and secretor factor in the Padmaraj of West Bengal. *Z. Morph. U. Anth.* 52 : 290 – 294

Gershowitz, H. (1959). The Diego factor among Asiatic Indians, Apaches and West African Negros : Blood types of Asiatic Indians and Apaches, *Amer. J. Phys. Anth.*, 17 : 195 – 200.

Kirk, R. L., Lai. L. Y. C., Vos, G. H., Wickremasinghe, R. L. and Perers, D. J. B. (1962). The blood and serum groups of selected populations in South India and Ceylon. *Amer. J. Phys. Anth.*, 20 : 485–497.

Kirk, R. L., Lai, L. Y. C., Vos, G. H. and Vidyarthi, L. P. (1962). A genetical study of the Oraons of the Chota Nagpur Plateau (Bihar, India), *Amer. J. Phys. Anth.* 20 : 375–385.

Kumar, N. (1957). A genetic survey among the Tentulia Bagdi and Duley of Hooghly district in West Bengal, *Bull. Dept. Anth.*, VI : 81–88.

Kumar, N. ABO blood groups and sickle-cell trait investigation in Madhya Pradesh, Indore District. *Acta. Genet. Med. Gemellol.* (in press).

Kumar, N. (1965). ABO blood groups and sickle-cell trait investigations in Madhya Pradesh ; Ratlam and the adjacent districts. *Bull. Anth. Surv. India.* 14 (3 & 4).

Kumar, N. and Sastry, D. B. (1961). A genetic survey among the Riang : A mongoloid tribe of Tripura. *Z. Morph. Anth.* 51 : 346–356.

Kumar, N. and Ghosh, A. K. (1967). ABO blood groups and sickle-cell trait investigations in Madhya Pradesh ; Ujjain and Dewas districts. *Acta Genet. (Basel)*, 17 : 55–61.

Majumdar, D. N. (1942). Blood groups of the Bhils of Gujarat. *Cur. Sci.*, XI : 353–354.

Majumdar, D. N. (1942). The Tharus and their blood groups. *J. R. A. Soc. Beng.* VIII : 25–27.

Majumdar, D. N. (1940). Blood groups and their distribution in certain castes in the United Provinces. *Sci. and Cult.*, 5 : 519–522.

Majumdar, D. N. and Rao, C. R. (1960). Race Elements in Bengal, Calcutta.

McArthur, N. and Penrose, L. S. (1949). World frequencies of the O, A and B blood group genes. *Ann. Eug.*, 15 : 302–305.

*Mourant, A. E. (1962). Notes on blood groups in India, *India Anthropology*, edited by T. N. Madan and G. Saran. Bombay, 185–192.

Mourant, A. E., Kopec, A. C. and Domaniewska-Sobezak, K. (1958). The ABO blood groups. Oxford.

Pathak, U. (1959). Incidence of Rh in the Punjabi females. *J. Ind. Med. Ass.*, 33 : 213–216.

Penrose, L. S. (1955). Genetics of Human Races. *Genetics in 20th Century* New York.

Penrose, L. S. Personal communication to Dr. S. S. Sarkar, dated 19. 10 66.

Roy, P. (1962). ABO blood groups from Nazat, 24-Parganas, West Bengal. *Sci. and Cult.*, 28 : 243–244.

Sarkar, S. S. (1940). Blood groups of the Angami Nagas. *Nature*, 145 : 261.

Sarkar, S. S., Banerjee, A. R., Bhattacharjee, P. and Roy, A. K. (1960). Further studies on ABO blood groups from Orissa. *Sci. and Cult.*, 25 : 694 – 695.

Singh, I. P. and Singh, D. (1961). The study of ABO blood groups of Sainis of Punjab. *Amer. J. Phys. Anth.*, 19 : 223 – 225.

Srivastava, R. P. (1965). Blood groups in Tharus of Uttar Pradesh and their bearing on ethnic and genetic relationships. *Hum. Biol.* 37 : 1 – 12.

Vyas, G. N., Bhatia, H. M., Sukumaran, P. K. Balakrishnan, V. and Sanghvi, L. D. (1962) Study of blood groups, Abnormal haemoglobins and other genetical characters in some tribes of Gujarat. *Amer. J. Phys. Anth.*, 20 : 255 – 265.

Wickremasinghe, R. L., Elizabeth, W., Ikin, Mourant, A. E. and Lehmann, H. (1963). The blood groups and haemoglobins of the Veddahs of Ceylon. J. Roy. Anth. Inst., 93 : 117 – 125.

For further details, see its bibliography.

A STUDY OF FINGER BALL DERMATOGLYPHICS IN WEST BENGAL

DHARMADAS SARKAR

(Received on 1 December, 1968)

Abstract : In the present paper the author has made an attempt to find out the pattern type variabilities among the six endogamous groups, namely, Brahmin, Kayastha, Namasudra, Rajbanshi, Muslim and Rabha (female) of Jalpaiguri District, West Bengal. The analysis includes the examination of the individual and comparative distribution of the principal patterns, both, hand-wise and digitwise, and their relevant indices.

Introduction

THE purpose of the present paper is to study the extent of variability of the dermal ridge configurations existing in each of the six population groups, namely, Brahmin, Kayastha, Namasudra, Rajbanshi, Muslim and Rabha (female) of the Jalpaiguri District of West Bengal, and to reconcile their biological relationships, if any. The Brahmin and the Kayastha are traditionally held as belonging to the upper castes, while the Namasudra and Rajbanshi as belonging to the lower strata of the Hindu society. The Muslims are considered as a religious community. The Rabhas are a local tribe and linguistically they belong to Bodo group (Sunder's Report of 1895, quoted by Mitra 1954).

According to Risley (1891) the Namasudras are a non-Aryan caste of Bengal engaged for the most part in cultivation. While, the Rajbanshis and Koches of Cooch-Behar and neighbouring areas have the same origin and described by Risley (1891) as a Dravidian tribe with suspected Mongolian admixture. But they are now recognized as a distinct Hindu caste (Sunder's Report of 1895, quoted by Mitra 1954).

The author is attached to the Anthropological Survey of India. His personal address is C/o Anthropological Survey of India, 27 Jawaharlal Nehru Road, Calcutta – 13.

Material and Method

The present paper attempts only in studying the apical dermal configurations. Finger and palmar impressions of 682 individuals belonging to the caste communities and tribal groups were collected by the author during November-February, 1963-64. The samples belong to various localities of the district. Care was taken in selecting unrelated individuals for a sample. Here the samples considered are five male groups and one female group, who belonged to all ages, varying from 7 years to 65 years. The male material consists of prints of Brahmin (n = 111), Kayastha (n = 120), Namasudra (n = 108), Rajbanshi (n = 145) and Muslim (n = 114), while the female material comprises only of Rabha (n = 84), and each of them belongs to an endogamous group. Due to the loss of third phalanges in left digit V of one member of the Kayastha, and left digit II of one member of the Muslim, the total estimable number of finger prints falls short by one print from each of the group.

Results and Discussion

Papillary Patterns

In Table 1 the digitwise distribution of the papillary pattern frequencies among the six population groups of the Jalpaiguri District has been presented.

(*a*) *Whorl* : In the distribution of whorl pattern, it is evident that except in one instance the digit IV has recorded the highest incidence of whorl, which is followed by a gradual decreasing trend of gradients in other digits. The frequency of whorl is found to be highest in digit IV, less in I, smaller in II and finally lowest in III and V. This digitwise diminutive trend which holds valid for all the groups excepts Kayastha. In the Kayastha group the distribution of whorl differs in digit I and IV, and in III and V ; here the abovesaid order follows through digit I to IV and V to III, instead of the undirectional trend shown by the rest.

(*b*) *Loop ulnar* : For the investigated populations, ulnar loops occur mostly in digits V and III, of which the digit V

displays the highest incidence. Loop ulnar in digits I and II occurs almost in equality among the Rajbanshi and Muslim populations, while the equality in this regard is expressed in digits II and IV of the Kayasthas and Muslims. Leaving aside those two involved digits, (i. e., V and III) the manifestation of ulnar pattern in others is less and variable.

(*c*) *Loop Radial* : Evidence of radial pattern is more in digit II, and rare in digits IV and V respectively. However, the manifestations of radial design in the latter two digits among the Rajbanshi and Muslims can not be denied. In view of the incidence of higher values and of equality in distribution of the pattern in digit II, the Namasudra and Muslim closely resemble each other.

(*d*) *Arch* : Arch configuration among the involved populations extends to the highest degree in digit II. Lesser manifestation of the concerned pattern is involved in digit V ; and four, of the considered population does not show any existence of the pattern in digit V. The expression of aich, however, mainly follows two decreasing gradients i e., (i) from digit II>III>I>IV>V, while the other (ii) from digit II>I>III>IV>V. The first course is followed by the Brahmin, Kayastha and Namasudra, while the second course has been taken up by the Rajbanshi, Muslim and Rabha groups. The two gradients, therefore, mainly refer to the interchanging of positions between digits III and I, and vice versa.

In Table 2 distribution of the principal papillary designs and their indices have been illustrated. It is clearly seen from the illustration that all the populations have a higher percentage of loop over the whorl configurations. It is interesting to note that the Rajbanshi (W=41.52%, L=56.34%) and Muslims (W=40.83%, L=56.80%) closely resemble one another in respect of whorl and loop patterns. The diversification of the Namasudras from the rest of population in regard to whorl and loop pattern (W=47.04%, L=51.30%) is well evidenced. However, it is apparent that the varying magnitude in respect of frequency estimates of the principal pattern types does not

exceed beyond five units, excepting the Namasudra whose whorl value (W = 47.04%) exceeded the aforesaid limit. In the distribution of arches, the populations maintain this limital uniformity. Thus, in respect of the different configurational variables in the populations no significant heterogeneity could be observed among them, as the magnitude of the pattern variations is not large enough.

From the examination of different indices, it is clearly evident that the indices of pattern intensity and whorl-loop are relatively higher among the Namasudras (P. I. I. = 14.54, W/L. I. = 91.69). A rise in the whorl-loop, or in the pattern intensity index is due to the subsequent increase of whorl configurations, while the loop plays a delicate role in influencing the indices (Dankmeijer 1938).

Handwise indices and frequency distributions of papillary patterns

Frequency of the main papillary configurations in the individual hands and the indices derived out of them are given in Table 3. It appears from the Table 3 that the right hand always shows a comparatively high occurrence of whorls, but lesser in the manifestation of loops among the populations. Whereas, the Rabha population shows a reverse trend in respect of whorl and loop manifestations. In general the arches occur more in the left hand. Moreover, it is observed that the pattern intensity (Cummins 1943) and whorl loop index (Furuhatta 1927) of the right hand, are comparatively high among majority of the populations. Exceptions is limited to the arch-whorl index (Dankmeijer 1938) which is seen to increase in the left hand.

Pattern intensity index and its significance

To evaluate the quantitative difference in the manifestation of patterns, the mean P. I. I. and its relevant statistical derivatives have been put forward in Table 4. It is evident from the table that P. I. I. ranges from 2.0 to 20.0 for the populations considered. The mean value of P. I. I. is seen

highest among the Namasudra (P. I. I. = 14.54 ± 0.30). Moreover, it is interesting to note that the mean P. I. I. of the Kayastha and Namasudra, the Rajbanshi, Muslim and Rabha groups shows almost equal consistency. While, the Brahmins are found to be more variable in this respect, having the lowest mean of 13.23 ± 0.37 with a standard deviation 3.93 ± 0.26. The index of finger pattern intensity is claimed to be one of the most important ethnic determinants in the study of dermatoglyphics (Newman 1960). Thus, here an attempt has been made to evaluate the biological relationship of the considered populations of Jalpaiguri District in view of the above index. Apparently it is observed that there exists inter-group difference in P. I. I. ; but when it is statistically treated, gives no significant results at 5% level of probability (Table 5), excepting the Brahmin versus Namasudra which gives a highly significant result ($0.010 > P > 0.005$).

Summary

A study relating to the finger ball pattern variability among the Brahmin, Kayastha, Namasudra, Rajbansi, Muslim and Rabha populations of Jalpaiguri District, West Bengal has been made. In terms of the Hindu social order, these populations occupy different positions in the hierarchy. The position of Brahmin is highest, next comes the Kayastha, while the Namasudra occupy the lowest position. The Muslims whom we have considered from a religious community.

The Rajbanshis are now a distinct caste of the Hindus having affinity with the Koches of Mongoloid admixture. The Rabhas are a tribal group linguistically affiliated to the 'Bodos.'

In the manifestation of principal papillary configuration and in pattern intensity index, no significant variation has been found among the populations. In pattern intensity index between the Brahmin and Namasudra ; variation is however found to be highly significant. The Rajbanshi and Muslims closely resemble each other in the incidences of whorl and loop pattern, and in pattern intensity index.

ACKNOWLEDGEMENT

The author expresses his indebtenness to Dr. D. K. Sen, Director, Anthropological Survey of India, for providing necessary facilities for the study.

REFERENCES

Cummins, H. and Midlo, C. 1943 : *Finger Prints, Palms and Soles. An Introduction to Dermatoglyphics.* The Blakiston Co. Philadelphia.

Dankmeijer, J. 1938 : Some anthropological data on finger prints. *Am. J. Phy. Anthrop.*, 23, 377–388.

Newman, M. T. 1960 : Populational Analysis of Finger and Palms Prints in Highland and Lowland Maya Indians. *Am. Jr. Phy. Anthrop.* N. S. 18, 45–58.

Holt, S. B. 1961 : Inheritance of dermal ridge patterns. In (*Recent Advances in Human genetics*, Edited by L. S. Penrose. J. and A. Churchill Ltd., London, 101–119.

Mittra, A. 1953 : *The Tribes and castes of West Bengal, Census* 1951 *West Bengal* P. 73, 75, 76.

Mitra, A. 1954 : *District Hand Book Jalpaiguri*, Census 1951, West Bengal. Appendix IV. P, Clv and Clxv.

Risely, H. H. 1891 : *Tribes and Castes of Bengal*, Vols. 1 and 2.

TABLE 1a

Digitwise distribution of papillary patterns (Brahmin. Male. Jalpaiguri)

Patterns	Digits (R+L combined)					
	I	II	III	IV	V	
	(N=222)%	(N=222)%	(N=222)%	(N=222)%	(N=222)%	Remarks
Whorl	47.30	36.94	27.48	56.31	23.42	
Loop, U	46.85	43.69	63.96	40.09	75.68	
Loop, R	0.45	7.21	0.90	0.0	0.0	
Arch	5.40	12.16	7.66	3.60	0.90	

TABLE 1b

Digitwise distribution of papillary patterns (Kayastha, Male, Jalpaiguri)

Patterns	Digits (R+L combined)					
	I	II	III	IV	V*	
	(N=240)%	(N=240)%	(N=240)%	(N=240)%	(N=239)%	Remarks
Whorl	59.17	41.67	26.67	56.25	28.03	*One finger
Loop, U	40.0	43.33	70.42	42.92	71.97	tip in L V
Loop, R	0.0	10.83	0.83	0.0	0.0	is absent
Arch	0.83	4.17	2.08	0.83	0.0	

TABLE 1c

Digitwise distribution of papillary patterns (Namasudra, Male, Jalpaiguri)

Patterns	Digits (R+L combined)					
	I	II	III	IV	V	
	(N=216)%	(N=216)%	(N=216)%	(N=216)%	(N=216)%	Remarks
Whorl	59.26	45.83	30.56	68.98	30.55	
Loop, U	39.81	35.18	66.67	30,55	69.44	
Loop, R	0.46	14.35	0.0	0.0	0.0	
Arch	0.46	4.63	2.78	0.46	0.0	

TABLE 1d

Digitwise distribution of papillary patterns (Rajbanshi, Male, Jalpaiguri)

Patterns	Digits (R+L combined)					
	I	II	III	IV	V	
	(N=290)%	(N=290)%	(N=290)%	(N=290)%	(N=290)%	Remarks
Whorl	50.69	40.34	31.37	60.34	24.83	
Loop, U	45.52	46.90	65.17	38,96	74.13	
Loop, R	0.34	9.31	1.03	0.0	0.34	
Arch	3.45	3.45	2.41	0.69	0.69	

TABLE 1e

Digitwise distribution of papillary patterns (Muslim, Male, Jalpaiguri)

Patterns	Digits (R+L combined)					
	I	*II	III	IV	V	
	(N=228)%	(N=227)%	(N=228)%	(N=228)%	(N=228)%	Remarks
Whorl	56.58	37.88	26.75	57.02	25.88	*One finger tip
Loop, U	40.35	41.85	69.74	41.67	74.12	is absent in
Loop, R	0.0	14.10	0.88	1.31	0.0	L II
Arch	3.07	6.17	2.63	0.0	0.0	

TABLE 1f

Digitwise distribution of papillary patterns (Rabha, Female, Jalpaiguri)

Patterns	Digits (R+L combined)					
	I	II	III	IV	V	
	(N=168)%	(N=168)%	(N=168)%	(N=168)%	(N=168)%	Remarks
Whorl	52.38	39.88	34.52	63.69	20.83	
Loop, U	41.67	47.02	61.31	34.52	79.17	
Loop, R	0.0	5.95	1.19	0.0	0.0	
Arch	5.95	7.14	2.98	1.78	0.0	

TABLE 2

Comparative distribution of principal pattern types and their indices among the population groups.

Population group	Sex	Pattern types					Indices		
		Whorl	Loop %		Total	Arch	P.I.I.	Ar/W.I.	W/L.I.
		%	U	R	%	%			
Brahmin (N=111)	M	38.29	54.04	1.71	55.77	5.95	13.23	15.53	68.65
Kayastha (N=120)	M	42.37	53.71	2.33	56.05	1.58	14.07	3.73	75.59
Namasudra (N=108)	M	47.04	48.33	2.96	51.30	1.67	14.54	3.55	91.69
Rajbanshi (N=145)	M	41.52	54.13	2.21	56.34	2.14	13.92	5.15	73.69
Muslim (N=114)	M	40.83	53.55	3.25	56.80	2.37	13.83	5.80	71.88
Rabha (N=84)	F	42.26	52.73	1.43	54.17	3.57	13.87	8.44	78.01

TABLE 3

Distribution of patterns handwise, and the indices derived out of them.

Population groups	Hand and No of Fingers	Frequency of pattern types			Indices		
	L. Hand	Whorl %	Loop %	Arch %	P. I. I.	Ar/W. I.	W/L. I.
Brahmin	(N=555)	34.95	58.38	6.67	12.82	19.08	59.86
Kayastha	(N=599)	38.23	60.43	1.33	13.68	3.47	63.26
Namasudra	(N=540)	43.33	55.00	1.67	14.16	3.85	78.78
Rajbanshi	(N=725)	38.48	58.90	2.62	13.58	6.80	65.33
Muslim	(N=569)	37.08	60.46	2.46	13.46	6.63	61.32
Rabha (F)	(N-420)	45.00	50.95	4.05	14.09	9.00	88.32
	R. Hhand						
Brahmin	(N=555)	41.62	53.15	5.23	13.63	12.56	78.30
Kayastha	(N=600)	46.50	51.67	1.83	14.46	3.98	89.99
Namasudra	(N=540)	50.74	47.59	1.67	14.90	3.29	106.61
Rajbanshi	(N=725)	44.55	53.79	1.65	14.28	3.70	82.82
Muslim	(N=570)	44.56	53.16	2.28	14.22	5.11	83.82
Rabha (F)	(N=420)	39.52	57.38	3.09	13.64	7.81	68.87

TABLE 4

Mean P. I. I and its Statistical Constants

Population groups	N	Range	P. I. Index	
			Mean ± S. E.	S. D. ± S. E.
Brahmin	111	2.0 – 20.0	13.23 ± 0.37	3.93 ± 0.26
Kayastha	120	2.0 – 20.0	14.07 ± 0.31	3.45 ± 0.22
Namasudra	108	8.0 – 20.0	14.54 ± 0.30	3.15 ± 0.21
Rajbanshi	145	3.0 – 20.0	13.92 ± 0.29	3.53 ± 0.20
Musim	114	9.0 – 20.0	13.83 ± 0.30	3.28 ± 0.21
Rabha (F)	84	5.0 – 20.0	13.87 ± 0.36	3.33 ± 0.25

TABLE 5

Values of 't' for differences in mean P. I. I. between the population groups

	Groups compared	Values of 't'	Remarks
1	Brahmin and Kayastha	1.71	For $n = \infty$, $t = 1.96$ at 0.05 level
2	,, and Namasudra	2.73*	* Significant
3	,, and Rajbanshi	1.44	
4	,, and Muslim	1.25	
5	,, and Rabha (F)	1.23	
6	Kayastha and Namasudra	1.07	
7	,, and Rajbanshi	0.34	
8	,, and Muslim	0.55	
9	,, and Rabha (F)	0.42	
10	Namasudra and Rajbanshi	1.48	
11	,, and Muslim	1.69	
12	,, and Rabha (F)	1.42	
13	Rajbanshi and Muslim	0.21	
14	,, and Rabha (F)	0.11	
15	Muslim and Rabha (F)	0.09	

MIDDLE PHALANGEAL HAIR AMONG CERTAIN GROUPS OF BIHAR

GURU CHARAN GHOSH

(Received on 13 October 1968)

Abstract : Data on middle phalangeal hair were collected from nine groups (male) of Bihar. The pooled data show heterogenity. Three distinct homogeneous clusters are observed, and the incidence of middle phalangeal hair is found to follow the social ladder.

Introduction

THE present article is a report on the distribution of middle phalangeal hair among certain groups of Bihar. The data were collected from three districts of Bihar (Table 1) namely, Monghyr, Bhagalpur and Santal Parganas in the year 1965-66 and consists of male populations of nine groups, such as, Brahmin, Rajput, Kayastha, Yadav, Tanti, Dusadh, Chamar, Muslim and Santal. Altogether 675 males were tested having the mean age of 30.61. The presence or absence of hair or the active follicle on the middle phalangeal segments of both the hands was observed with the help of magnifying lens.

Analysis

Table 1 gives the picture of incidence of middle phalangeal hair of the nine male groups collected from Monghyr, Bhagalpur and Santal Parganas of Bihar. It varies from 15.38% to 49.41% and the highest percentage of incidence was found among the Brahmin and the lowest among the Chamar. It is interesting that these two groups stand on the two extremes of social hierarchy. The pooled data of nine groups are tested for homogeneity and is found to be heterogeneous ($x^2{}_{8df} = 30.326$, $0.001 > P$).

Yadav, Dusadh and Muslim are considered to form a single cluster (Cl. I) on the basis of similarity in percentage of incidence. As the Brahmin, Rajput and Kayastha samples showed the higher percentage than these three groups, they have been grouped under cluster II. Similarly the remaining Santal, Tanti and Chamar samples are put under cluster III, as they show comparatively low percentage. These three clusters are tested for homogeneity within themselves and fonnd to be homogeneous (Table 2). Table 2 shows that cluster I differs significantly from both, cluster II ($x^2{}_{1df} = 5.706$, $0.02 > P > 0.01$) and cluster III ($x^2{}_{1df} = 8.775$, $0.01 > P > 0.001$). Similarly cluster II is tested for homogeneity with cluster III and found to be heterogeneous ($x^2{}_{1df} = 25.201$, $P > 0.001$). Table I shows a trend in the proportion of incidence as per social hierarchy. Therefore the data are arranged according to social hierarchy (Prasad 1957) and the Muslim and Santal samples are excluded being non-caste groups. The linearity of the trend is tested as suggested by Armitage (1955). The departure from linearity is found to be statistically not significant ($chi^2{}_{5df} = 4.687$, $0.50 > P > 0.30$).

Table 3 shows that there is no significant bimanual difference in the distribution of middle phalangeal hair. In other words, both the hands have got equal chances to bear the incidence.

From Table 4 it appears that out of 675 individuals examined there are only 29 persons who are unilaterally affected. Out of these 29 individuals, only 18 persons bear the trait on left hand while right is free. The remaining 11 persons have got middle phalangeal hair only on right hand, left hand being free from hairs.

Fingers from index to little are represented by the numerals 2 to 5 to show the distribution of middle phalangeal hair by digital combination. Zero signifies absence of incidence (Rakshit 1961). Table 5 shows the maximum frequency on 0340 combination followed by 0345, 0040etc. Brahmins are having highest number of incidence on 0040 followed by 0340 combination. In case of Rajput, Yadav, Muslim, Dusadh, Santal and Tanti it is found maximum on 0340 combination.

Only among Kayastha and Chamar the digital cambination of 0345 bears the highest frequency of incidence of middle phalangeal hair.

Table 6 gives a picture of fingerwise distribution of middle phalangeal hair and 4>3>5>2 formula holds good for all the cases except Rajput. This may possibly be due to small sample size. It is also to be noted that the 2nd digit is free from incidence in Kayastha, Dusadh, Santal, Tanti and Chamar and though present among rest of the groups is not adequately represented.

Table 7 gives the picture of symmetrical and asymmetrical combination of hands in respect of middle phalangeal hair. Individuals with symmetrical combinations are overwhelmingly larger and this is true for all the groups. Taking all the groups together, three out of every four persons show symmetrical combination.

Comparison

The present data are compared with the available materials of respective groups in other States. The present Brahmin group is compared against the Brahmin group of West Bengal (Bhattacharjee 1956), Madhya Pradesh (Dutta 1964) and Uttar Pradesh (Singh & Dutta 1955). The difference in sample percentages are not statistically significant (chi^2_{3df} = 6.460, 0.10 > P > 0.05), neither Rajput group of Madhya Pradesh (Dutta '64) is found to be different from that of Bihar (chi^2_{1df} = 0.0000444, 0.99 > P > 0.98). The present Muslim data are tested against the Muslim of West Bengal (Bhattacharjee 1956) and Madhya Pradesh (Dutta 1964) together and found to be heterogenous chi^2_{2df} = 9.772, 0.01 > P > 0.001). Bihar Muslims differ significantly from those of West Bengal (chi^2_{1df} = 7.468, 0.01 > P > 0.001) and also of Madhya Pradesh (chi^2_{1df} = 6.136, 0.02 > P > 0.01).

Discussion

The present data do not show any bimanual difference in the incidence of middle phalangeal hair. Out of 675 individuals examined, only 29 persons (4.2%) are unilaterally

affected. The incidence of the trait is found maximum on the ring finger and least on the index and it follows the accepted formula of 4>3>5>2. Presence of hair on index finger is a rare phenomena. In the present study maximum number of affected individuals belong to the 0340 combination followed by 0345, 0040 etc. There is preponderance of identical hands and three individuals out of every four do show bimanual symmetry.

The data comprised of nine male groups of Bihar. The pooled data of nine groups show heterogeneity. Brahmin and Chamar stand on the two extreme positions as they do so in social hierarchy. Three distinct homogeneous clusters are observed. Brahmin, Rajput and Kayastha forming one cluster, the Yadav, Dusadh and Muslim the second and the Santal, Tanti and Chamar the third. These three clusters are tested for homogeneity with each other and found to be heterogeneous. Incidence of middle phalangeal hair is found to follow the graded rule of social hierarchy excepting Dusadh and Tanti and it is just these two groups which have interchanged their position. Therefore the data are arranged as per social hierarchy (Prasad 1957) placing Tanti and Dusadh to their own social position and Santal and Muslims are excluded for the present purpose being non-caste group. To test the validity of this trend a statistical test proposed by Armitage (1955) is applied. Departure from linearity is not statistically significant. Therefore the data suggest some association in the proportion of incidence of middle phalangeal hair and social hierarchy of the groups.

The present data are compared with the available material to test the homogeneity. It is seen that the Brahmin of Bihar is homogeneous with that of Madhya Pradesh, West Bengal and Uttar Pradesh though they belong to different ecology. This also holds good in case of Rajput of Bihar and Madhya Pradesh. The present Muslim data are compared against the Muslim of West Bengal and Madhya Pradesh and it shows heterogeneity. Thus it leads us to state that the Muslims of Bihar are distinctly apart in respect of middle phalangeal hair from Muslims of both the States.

ACKNOWLEDGEMENTS

The author deeply acknowledges his gratefulness to Sri H. K. Rakshit for his valuable suggestions in preparing this article and to Sri R. B. Bhale for all the statistical analysis of the data.

RFERENCES

Armitage, P. 1955 : Test for linear trends in proportions and frequencies. Biometrics, 11, 375-386.

Bernstein, M. M. and Burks, B. S. 1942 : The incidence and mendalian transmission of mid-digital hair in man. Journal of Heredity. 33, 45-53.

Bhattacharjee, P. N. 1956 : A genetic survey in the Rarhi Brahmin and Muslims of West Bengal. Bull. Dept. Anth. 5 : 1, 18-28.

Boyd, W. C. and Boyd, L. G. 1937 : New data on blood groups and other inherited factors in Europe and Egypt. Am. Jr. Phy. Anth. 23 : 1, 49-70.

Danforth, E. C. 1954 : Distribution of hair on the digits of man. Am. Jr. Phy. Anth. 4 : 2, 189-204.

Dutta, P. C. 1965 : On the variability of middle phalangeal hair among Indian population. J. R. A. I., 95 : 1, 115-126.

Garn, S. M. 1951 : The use of middle phalangeal hair in population studies. Am. Jr. Phy. Anth. 9 : 3, 325-334.

Prasad, N. 1957 : The myth of the caste system. Samjna Prakasan. Patna.

Rakshit, H. K. 1961 : Plea for study of pes phalangeal hair. Man in India. 41 : 2, 100-110.

TABLE 1

Frequencies of middle phalangeal hair among different groups (male) of Bihar.

Group	Mean age	Sample size	With middle phalangeal hair frequency	With middle phalangeal hair percentage	Place of origin
Brahmin	31.00	85	42	49.41	Monghyr, Bhagalpur
Rajput	27.88	25	11	44.00	and Santal Parganas
Kayastha	32.76	33	13	39.39	Bhagalpur
Yadav	24.83	65	22	33.85	Monghyr, Santal Parganas
Muslim	31.18	134	45	33.58	Monghur, Bhagalpur and Santal Parganas
Dusadh	32.09	66	22	33.33	Monghyr, Bhagalpur
Santal	33.39	139	36	25.90	Monghyr, Bhagalpur and Santal Parganas
Tanti	31.46	50	10	20.00	Monghyr
Chamar	30.88	78	12	15.38	Bhagalpur and Santal Parganas
Total	30.61	675	213	31.56	

Chi^2 x^2 8df=30.326, $P>0.001$

TABLE 2

Chi^2 results of Different Groups

Sr. No.	Groups compared	Code if any	Chi^2 with P level	Results
1	Brahmin, Rajput, Kayasth	Cl II	2 df, 1.022,0.70>P>0.50	Homogeneous
2	Yadav, Muslim, Dusadh	Cl I	2 df, 0.0197,P>0.99	,,
3	Santal, Tanti, Chamar	Cl III	2 df, 3.364,0.20>P>0.10	,,
4	Cl I and Cl II		1 df, 5.706,0.02>P>0.01	Heterogeneous
5	Cl II and Cl III		1 df, 25.201,P>0.001	,,
6	Cl I and Cl III		1 df, 8.775,0.01>P>0.001	,,

TABLE 3

Handwise distribution of Middle Phalangeal Hair among different groups (Male) of Bihar

Groups	Left and Right hand combined	Right	Left
Brahmin	42	37	40
Rajput	11	11	10
Kayasth	13	13	11
Yadav	22	21	21
Muslim	45	40	44
Dusadh	22	19	20
Santal	36	33	35
Tanti	10	10	10
Chamar	12	11	11
Total	213	195	20

TABLE 4

Unilateral distribution of Middle Phalangeal Hair among different groups (Male) of Bihar

Group	Left free, Right affected	Right free, Left affected	Total
Brahmin	2	5	7
Rajput	1	–	1
Kayasth	2	–	2
Yadav	1	1	2
Muslim	1	5	6
Dusadh	2	3	5
Santal	1	3	4
Tanti	–	–	–
Chamar	1	1	2
Total	11	18	29

TABLE 5

Digital combination with Middle Phalangeal among different groups (Male) of Bihar

Group	Brahmin	Rajput	Kayastha	Yadav	Muslim	Dusadh	Santal	Tanti	Chamar	Total
2345	2	2	–	2	2	–	–	–	–	8
0345	15	7	10	12	32	4	18	2	8	108
0300	1	2	1	–	1	–	1	–	1	7
0340	25	9	8	18	33	24	37	14	7	175
2300	–	1	–	1	–	–	–	–	–	2
0045	4	–	–	–	1	1	–	–	–	6
0040	30	–	5	9	15	10	12	4	6	91
0000	86	28	40	86	178	88	206	80	132	924
Total	163	49	64	128	262	127	274	100	154	1321

TABLE 6

Fingerwise distribution of Middle Phalangeal Hair among different groups (Male) of Bihar

Group	Fingers			
	2	3	4	5
Brahmin	2	43	76	21
Rajput	3	21	18	9
Kayastha	–	19	23	10
Yadav	3	33	41	14
Muslim	2	68	83	35
Dusadh	–	28	39	5
Santal	–	56	67	18
Tanti	–	16	20	2
Chamar	–	16	21	8
Total	10	300	388	122

TABLE 7

Symmetrical and Asymmetrical combination of Middle Phalangeal Hair among different groups (Male) of Bihar

Group	Symmetrical combination	Asymmetrical combination	Total
Brahmin	27	15	42
Rajput	9	2	11
Kayastha	11	2	13
Yadav	12	10	22
Muslim	33	12	45
Dusadh	13	9	22
Santal	30	6	36
Tanti	10	—	10
Chamar	9	3	12
Total	154	59	213

TABLE 8

Comparison of frequencies of Middle Phalangeal Hair among Male Brahmins of West Bengal, Madhya Pradesh, Uttar Pradesh and Bihar

Group	Place of investigation	Sample size	With Phalangeal Hair Abs. No.	With Phalangeal Hair Percentage	Author
Rarhi Brahmin	West Bengal	191	111	58.12	Bhattacharjee '56
Brahmin	Madhya Pradesh	96	44	45.83	Dutta '64
Mohyal Brahmin	Uttar Pradesh	71	31	43.66	Singh and Dutta '55
Brahmin	Bihar	85	42	49.41	Present study

chi^2 3df = 6.460, 0.10 > P > 0.05 Homogeneous

TABLE 9

Comparison of frequencies of Middle Phalangeal Hair among Male Rajputs of Madhya Pradesh and Bihar

Place of investigation	Sample size	With Phalangeal Hair Abs. No.	Percentage	Author
Madhya Prades	49	23	46 94	Dutta '64
Bihar	25	11	44.00	Present study
	$chi^2 1df = 0.0000444$,	$0.99 > P > 0.98$		Homogeneous

TABLE 10

Comparison of frequencies of Middle Phalangeal Hair among Male Muslims of West Bengal, Madhya Pradesh and Bihar

Place of investigation	Sample size	With Phalangeal Hair Abs. No.	Percentage	Author
West Bengal	203	100	49.26	Bhattacharjee '56
Madhya Pradesh	101	51	50.49	Dutta '64
Bihar	134	45	33.58	Present study
	$chi^2 2df - 9.772$,	$0.01 > P > 0.001$		Heterogeneous

FINGERPRINTS, COLOUR BLINDNESS, AND OTHER FEATURES IN THE MIRIS OF ASSAM

R. P. SRIVASTAVA*.

Abstract : The finger dermatoglyphics of the Miris indicate the presence of higher frequency of loops than whorls. The mean ridge counts also appear to be high. No case of vision defect has been observed. The frequency of tongue folders observed in the Miris conforms to the general observation.

Introduction

THE Miris are divided into two major groups ; the Barogam, and the Doagam. The Barogam group consists of two main clans ; the Doley, and the Pegu. The second major group Doagam is divided into eight sub-groups ; the Pagro or Chutia Miri, Dambook, Chayang, Moying, Dyan, Delo or Lachan Gonya, Tayu-Taye or Joau Gonya, and Mirang each having a number of clans of its own. The entire community of the Miris constitutes one endogamous group. Cross-cousin marriages are practised by the Miris but parallel-cousin marriages are avoided.

There has been no systematic investigation into the genetic composition of the Miris except that one finds a reference to their finger dermatoglyphics in Chakravartti's paper (1963). The author got an opportunity to visit few Miri villages in the Dhemaji subdivision of district Lakhimpur from where the present data were collected.

Material and Methods

The samples consists of finger prints and other observations from 37 unrelated males belonging to the Doley and Pegu clans of Barogam ; one of the major divisions of the Miris.

The author is Reader and Head of the Department of Anthropology. Dibrugarh University, Assam.

The usual schemes of Cummins and Midlo (1961) were employed for formulating the finger pattern types. Arches include diminutive loops and much reduced whorls which lack a ridge count. For ridge counting rules adopted by Holt (1949) were used. Ishahara chart was used to examine colour vision. Since all the subjects could read, there was no difficulty in asking them to read all the 25 plates of Ishihara chart. As regards the tongue folding the subjects were asked to bring the sides of the tongue over the top as I demonstrated being a tongue folder. Somatoscopic observation was made for the ear lobe.

Results

Percentages of finger patterns in both the hands are shown in Table 1. It is observed that the main pattern types are distributed practically in the same order in both the hands except the sub-types of whorls. Finger patterns of both the hands combined together indicate that loops are much more than the whorls.

Mean index of pattern intensity and mern ridge counts are shown in Table 2. Index of pattern intensity is a measure of the number of triradii per individual. Its values range from 0, all arches to 20, all whorls. In the present series the mean index of pattern intensity obtains a value of 13.40 ± 0.39. Useful interpretation of the fingerprint data is also secured from the analysis of the ridge counts. The mean ridge count in the present sample is 143.60 ± 5.25.

Colour blindness is one of the sex-linked conditions. There are different kinds of colour blindness. There are persons who can not distinguish any colours. There are others who have some slight defect in their vision and as such can not distinguish red from green. Red-green blindness has been found to be the commonest of all defects of sex-linkage. In the present investigation not a single case was found for any of the vision defects.

Ability to roll the tongue i.e., to bring the sides of the tongue over the top is inherited as a simple dominant whereas the inability to roll the tongue is inherited as a recessive

(Ashley Montagu 1960). In the present series about 64 per cent are the tongue folders (Table 3).

There are many different features of the ears which are inherited independently. The lobe of the ear may hang free or it may be attached to the head. The former is determined by a dominant gene and the latter by a recessive gene (Ashley Montagu 1960). The present study reveals that 70 per cent of the Miris have attached lobes (Table 3).

Comparison and Conclusions

Chakravartti (1963) has reported two male samples of Miris ; in one of the samples he has shown equal distribution of whorls and loops and in the other lowering of whorls. But in the present sample of Miris an excess of loops over whorls is observed. In other Mongoloid tribes of Assam one can find both the situations clearly indicated by Chakravartti. Data on ridge counts are not available from any of the Assam tribes studied so far from the point of view of dermatoglyphics. Srivastava (1965) observed a mean ridge counts of 126.65 ± 1.81 in the Tharus of U. P. a Mongoloid tribe. In the Miris a much higher mean ridge counts of 143.60 ± 5.25 has been found.

Colour blindness in Indian populations has been found to vary around 4 per cent with the exception of the Toda (12%) (see Bhattacharya, 1960). Ashley Montagu (1960) reported that abour 65 per cent of people can roll the tongue. The present observation is in conformity with what Ashley Montagu has reported.

ACKNOWLEDGEMENTS

The author is thankful to Dr. N. N. Pegu of the Civil Dispensary, Dhemaji, Mr. D. Doley, Lecturer, Dept. of Sociology, Dibrugarh University and Mr. S. Pegu, a student of M. A. (final) sociology, for their help in the field.

REFERENCES

Ashley Montagu, M. F. 1960 : Human Heredity, *A Mentor Book.*

Bhattacharya, D. K. 1966 : Frequency of colour blindness among the Anglo Indians of India. *J. De Genet. Hum* ; 15 ; pp. 3 – 6.

Chakravartti, M. R. 1963 : Ethnic bearing of the dermatoglyphic studies in India *Act. Genet. Geme,* 12 : pp. 374 – 404.

Cummins, H. and C. Midlo 1961 : Fingerprints, Palms and Soles. An Introduction to Dermatoglyphics. *Dover Publication.*

Holt, Sarah B. 1949 : A quantitative survey of the finger-prints of a small Sample of a British population. *Ann. Engen. London.* 14 : pp. 329 - 338.

Srivastava, R. P. 1965 : A quantitative analysis of the finger prints of the Tharus of Uttar Pradesh. *Am. J. Phys. Anthrop.* 21 : pp. 69 – 76.

TABLE 1

Percentages of finger pattern types in the Miris.

No.	Side	WHORLS: Whorl	WHORLS: Lateral pocket and twin loop	WHORLS: Central pocket	WHORLS: Accidental	WHORLS: Total	LOOPS: Radial	LOOPS: Ulnar	LOOPS: Total	ARCHES: Tented	ARCHES: Others	ARCHES: Total
	R	30.81	2.16	4.32	–	37.29	1.08	57.83	58.91	1.08	2.70	3.78
37	L	24.32	3.78	8.64	1.08	37.83	1.08	57.29	58.37	1.08	2.70	3.78
	R+L	27.56	2.97	6.48	0.58	37.56	1.08	57.56	58.64	1.08	2.70	3.78

TABLE 2

Mean index of pattern indensity and mean ridge counts in the Miris

Index of Pattern Intensity: No.	Index of Pattern Intensity: Mean	Index of Pattern Intensity: S. E.	Index of Pattern Intensity: S. D.	Ridge Counts: No.	Ridge Counts: Mean	Ridge Counts: S. E.	Ridge Counts: S. D.
37	13.40	0.39	2.33	30	143.60	5.25	28.73

TABLE 3

Tongue folding and the ear lobe in the Miris.

TONGUE FOLDING					EAR-LOBE				
Total	Folder		Non-folder		Total	Separate		Attached	
No.	No.	%	No.	%	No.	No.	%	No.	%
36	23	63.88	13	36.11	36	11	30.55	25	69.44

Notice

MAN IN INDIA invites articles, notes and communications from those who are interested in anthropology, archaeology, linguistics and folk-culture. Manuscripts sent for publication must be typewritten (double-spaced) on one side of the paper with a covering letter specifying **the number of reprints required**, 25 copies of which are supplied free to contributors.

Articles should also be accompanied by an **abstract of the paper covering not more than 10 lines.** Contributors are also requested to type their **official designation** and **personal addresses** at the foot of the first page of the typescript. Contributors are requested not to send any such article which has already been sent to some other journal.

* * * *

All correspondence should be addressed to the Editor, *not by name*, to the Office of **Man in India**, 18 Church Road, Ranchi, Bihar, India. Arrears and current subscriptions should be sent to the Manager, **Man in India**, Ranchi, Bihar, India. All publications meant for exchange should be sent to Ranchi.

If subscribers do not receive **Man in India** in time, they should please send their complaints to the office by the following date, after which it would not be possible for the Management to furnish them with duplicate copies if the original ones have not been received.

No. 1	...	15th April
No. 2	...	15th July
No. 3	...	15th October
No. 4	...	15th January

* * * *

Editor : Nirmal Kumar Bose, M. Sc., F. N. I

Annual Subscription :

Inland : Rs. 15·00 Foreign : 25s. or 5 dollars or its equivalent

Single copy : Rupees Four.

Foreign subscribers are requested to pay subscription either in Sterling or Dollar.

Printed and Published by Ajit Kumar Bose at the Sakti Press, 27/3B Hari Ghosh Street, Calcutta 6.